


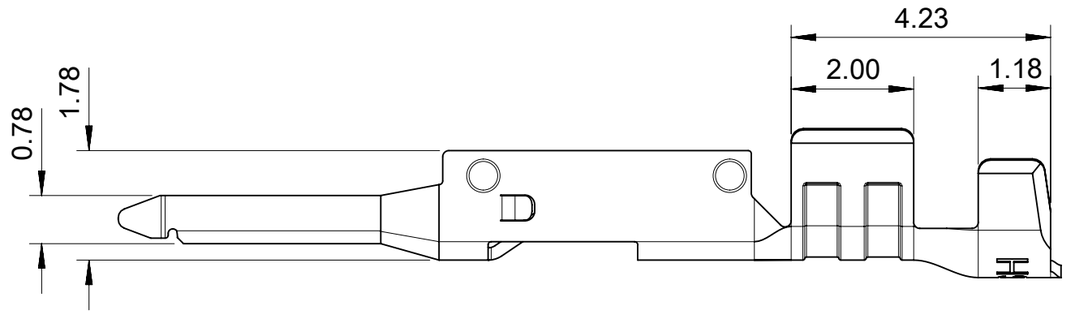


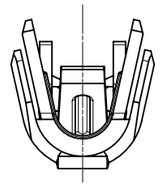

NOTES:
1. MATERIAL: HIGH CONDUCTIVITY COPPER ALLOY.
2. PLATING FINISH SEE CHART IN SHEET 3.
3. PRODUCT SPECIFICATION: 2014471000-PS.
4. PACKAGE SPECIFICATION: 2014471000-PK.
5. THE TERMINAL IS LUBRICATED.
6. THE COMPONENT COMPLIANT TO RoHS DIRECTIVE 2011/65/EU AND ELV DIRECTIVE 2000/53/EC.
7. PRODUCT APPLY TO RECEPTACLE HOUSING OF 200277**** AND 201444****.
8. PARTS CONFORM TO CLASS 'B' REQUIREMENTS OF COSMETIC SPECIFICATION PS-45499-002.
9. APPLICATION SPECIFICATION: 2014471000-AS.
10. RECOMMENDED INSULATOR:
    20AWG WIRE, OD 1.60MM MAX.
    24AWG WIRE, OD 1.30MM MAX.

THIS DRAWING CONTAINS INFORMATION THAT IS PROPRIETARY TO MOLEX ELECTRONIC TECHNOLOGIES, LLC AND SHOULD NOT BE USED WITHOUT WRITTEN PERMISSION

| DIMENSION UNITS | SCALE |
|---|---|
| mm | 10:1 |

| GENERAL TOLERANCES (UNLESS SPECIFIED) | | |
|---|---|---|
| ANGULAR TOL | ± | ° |
| 4 PLACES | ± | |
| 3 PLACES | ± | 0.1 |
| 2 PLACES | ± | 0.2 |
| 1 PLACE | ± | 0.3 |
| 0 PLACES | ± | |

DRAFT WHERE APPLICABLE MUST REMAIN WITHIN DIMENSIONS

CURRENT REV DESC:

EC NO: 749038
DRWN: GLLI 2023/05/10
CHK'D: XQZHANG 2023/05/25
APPR: XQZHANG 2023/05/25

INITIAL REVISION:
DRWN: GLLI 2018/07/20
APPR: AYIN 2019/04/17

THIRD ANGLE PROJECTION | DRAWING: A3-SIZE | SERIES: 201447

molex

SALES DRAWING OF PLUG TERMINAL

PRODUCT CUSTOMER DRAWING

| DOCUMENT NUMBER | DOC TYPE | DOC PART | REVISION |
|---|---|---|---|
| 2014471000-SD | PSD | 000 | B1 |

| MATERIAL NUMBER | CUSTOMER | SHEET NUMBER |
|---|---|---|
| | GENERAL MARKET | 1 OF 3 |

| DOCUMENT STATUS | P1 | RELEASE DATE | 2023/05/25 00:11:21 |
|---|---|---|---|

FORMAT: master-tb-prod-A3
REVISION: J1
DATE: 2021/05/01

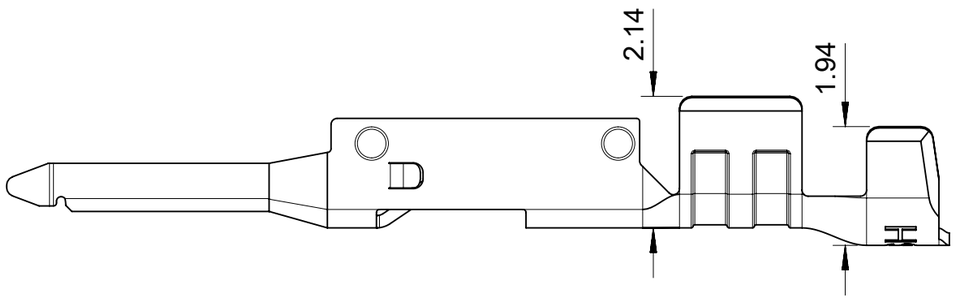


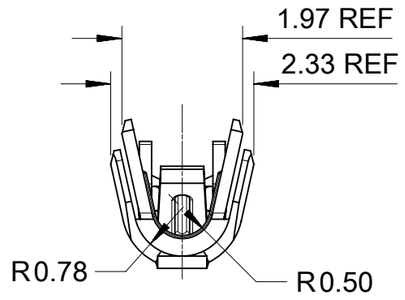


ONLY FOR WIRE OF AWG 20/22

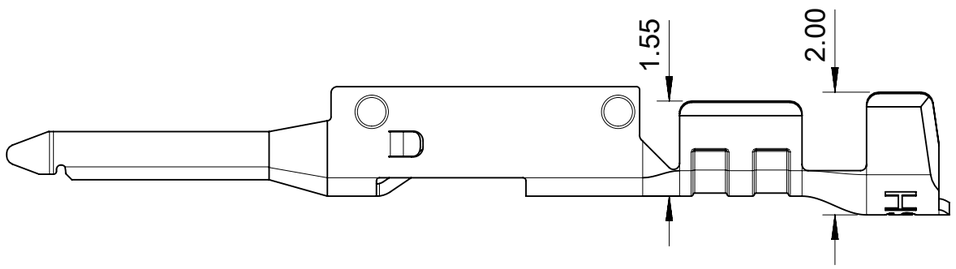


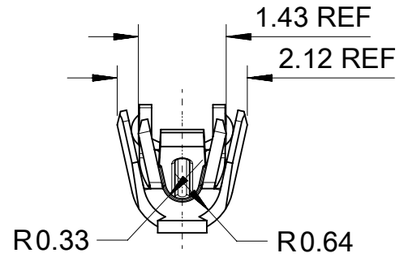


ONLY FOR WIRE OF AWG 24/26

THIS DRAWING CONTAINS INFORMATION THAT IS PROPRIETARY TO MOLEX ELECTRONIC TECHNOLOGIES, LLC AND SHOULD NOT BE USED WITHOUT WRITTEN PERMISSION

| DIMENSION UNITS | SCALE |
|---|---|
| mm | 10:1 |

| GENERAL TOLERANCES (UNLESS SPECIFIED) | | |
|---|---|---|
| ANGULAR TOL | ± | ° |
| 4 PLACES | ± | |
| 3 PLACES | ± | 0.1 |
| 2 PLACES | ± | 0.2 |
| 1 PLACE | ± | 0.3 |
| 0 PLACES | ± | |

DRAFT WHERE APPLICABLE MUST REMAIN WITHIN DIMENSIONS

CURRENT REV DESC:

EC NO: 749038
DRWN: GLLI 2023/05/10
CHK'D: XQZHANG 2023/05/25
APPR: XQZHANG 2023/05/25

INITIAL REVISION:
DRWN: GLLI 2018/07/20
APPR: AYIN 2019/04/17

molex

SALES DRAWING OF PLUG TERMINAL

PRODUCT CUSTOMER DRAWING

| DOCUMENT NUMBER | DOC TYPE | DOC PART | REVISION |
|---|---|---|---|
| 2014471000-SD | PSD | 000 | B1 |

| THIRD ANGLE PROJECTION | DRAWING | SERIES | MATERIAL NUMBER | CUSTOMER | SHEET NUMBER |
|---|---|---|---|---|---|
| | A3-SIZE | 201447 | | GENERAL MARKET | 2 OF 3 |

| DOCUMENT STATUS | P1 | RELEASE DATE | 2023/05/25 00:11:21 |
|---|---|---|---|

FORMAT: master-tb-prod-A3
REVISION: J1
DATE: 2021/05/01

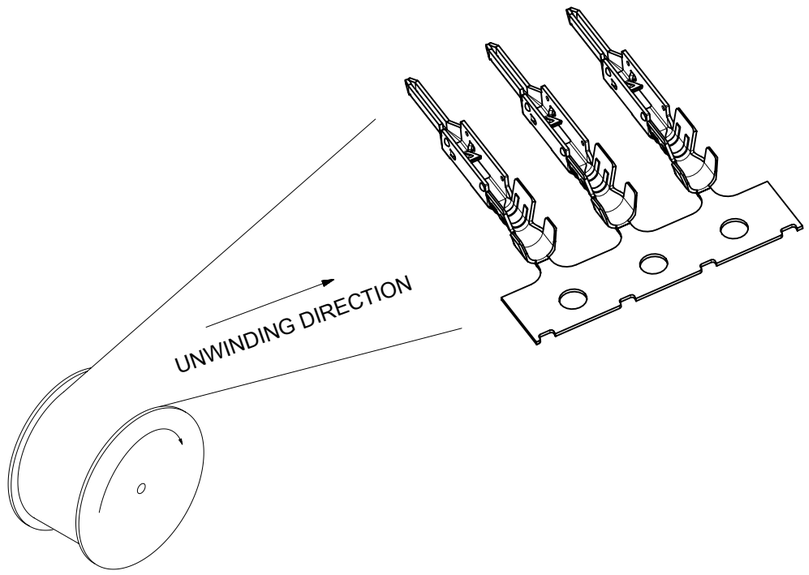


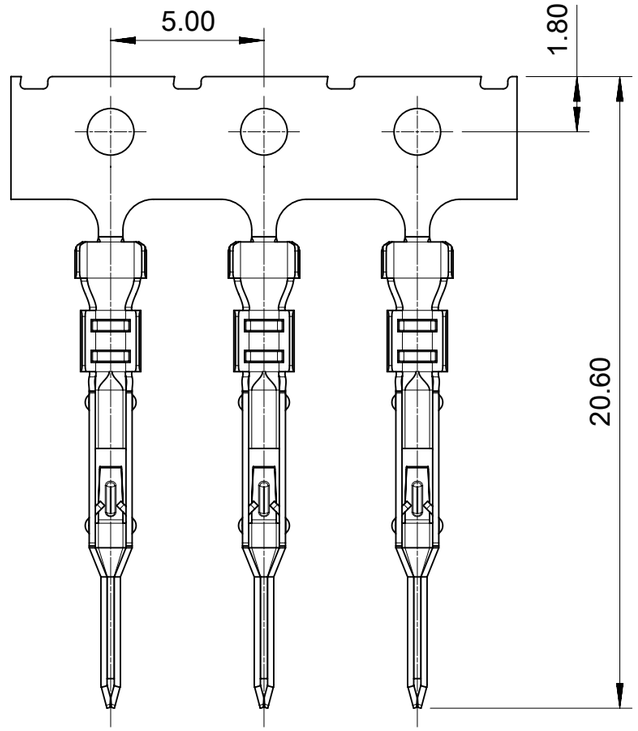


| PART NUMBER (WITH LUBE) | PART NUMBER (WITHOUT LUBE) | PLATING TYPE | WIRE SIZE(AWG) |
|---|---|---|---|
| 201447-1400 | N/A | A | 24/26 |
| N/A | 201447-1200 | B | |
| 201447-1600 | 201447-1300 | C | |
| N/A | 201447-1800 | D | |
| 201447-2400 | N/A | A | 20/22 |
| N/A | 201447-2200 | B | |
| 201447-2600 | 201447-2300 | C | |
| N/A | 201447-2800 | D | |

| PLATING SPECIFICATION | |
|---|---|
| A | REFLOW MATTE TIN 2.5 MICRONS MINIMUM OVERALL, UNDER NICKEL PLATING 1.25 MICRONS MINIMUM OVERALL. |
| B | GOLD PLATING 0.38 MICRONS MINIMUM ON CONTACT AREA, MATTE TIN 2.5 MICRONS MINIMUM ON CRIMP AREA, UNDER NICKEL PLATING 1.25 MICRONS MINIMUM OVERALL. |
| C | GOLD PLATING 0.76 MICRONS MINIMUM ON CONTACT AREA, MATTE TIN 2.5 MICRONS MINIMUM ON CRIMP AREA, UNDER NICKEL PLATING 1.25 MICRONS MINIMUM OVERALL. |
| D | GOLD PLATING 0.025 MICRONS MINIMUM ON CONTACT AREA, MATTE TIN 1.5 MICRONS MINIMUM ON CRIMP AREA, UNDER NICKEL PLATING 1.25 MICRONS MINIMUM OVERALL. |

THIS DRAWING CONTAINS INFORMATION THAT IS PROPRIETARY TO MOLEX ELECTRONIC TECHNOLOGIES, LLC AND SHOULD NOT BE USED WITHOUT WRITTEN PERMISSION

| DIMENSION UNITS | SCALE |
|---|---|
| mm | 5:1 |

| GENERAL TOLERANCES (UNLESS SPECIFIED) | |
|---|---|
| ANGULAR TOL | ± ° |
| 4 PLACES | ± |
| 3 PLACES | ± 0.1 |
| 2 PLACES | ± 0.2 |
| 1 PLACE | ± 0.3 |
| 0 PLACES | ± |

DRAFT WHERE APPLICABLE MUST REMAIN WITHIN DIMENSIONS

CURRENT REV DESC:

EC NO: 749038
DRWN: GLLI 2023/05/10
CHK'D: XQZHANG 2023/05/25
APPR: XQZHANG 2023/05/25

INITIAL REVISION:
DRWN: GLLI 2018/07/20
APPR: AYIN 2019/04/17

molex

SALES DRAWING OF PLUG TERMINAL

PRODUCT CUSTOMER DRAWING

| DOCUMENT NUMBER | DOC TYPE | DOC PART | REVISION |
|---|---|---|---|
| 2014471000-SD | PSD | 000 | B1 |

| THIRD ANGLE PROJECTION | DRAWING | SERIES | MATERIAL NUMBER | CUSTOMER | SHEET NUMBER |
|---|---|---|---|---|---|
| | A3-SIZE | 201447 | | GENERAL MARKET | 3 OF 3 |

| DOCUMENT STATUS | P1 | RELEASE DATE | 2023/05/25 00:11:21 |
|---|---|---|---|

FORMAT: master-lb-prod-A3
REVISION: J1
DATE: 2021/05/01