Data sheet

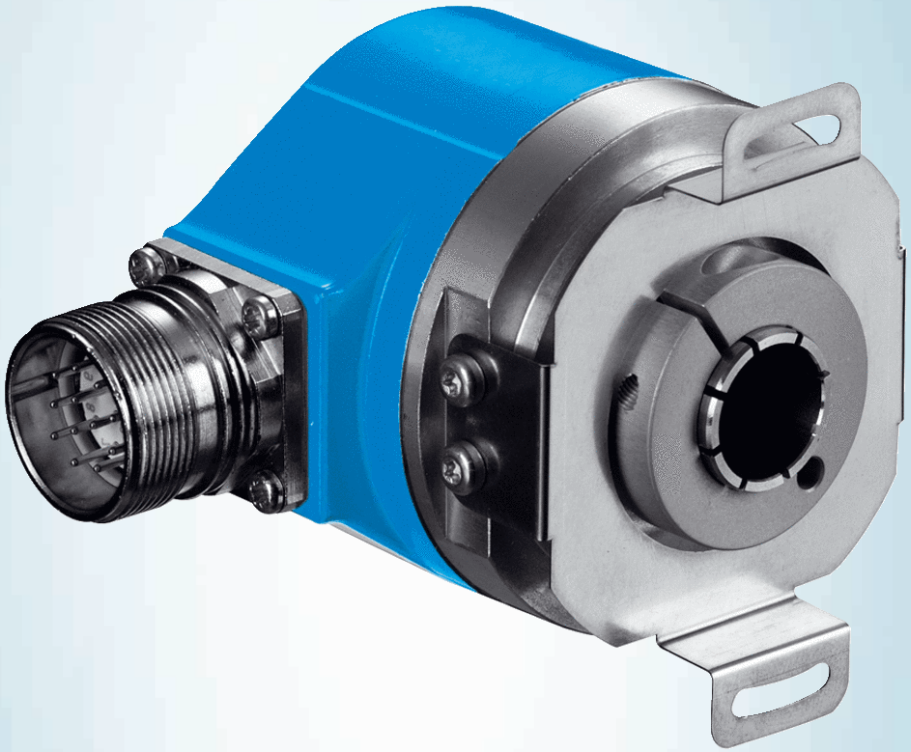

ARS60-HAA03600

ARS60

ABSOLUTE ENCODERS

SICK
Sensor Intelligence.

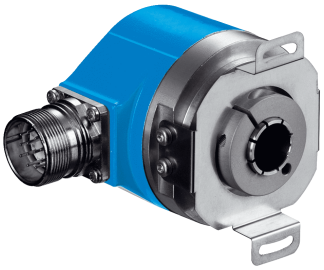

Illustration may differ

Ordering information

Type	part no.
ARS60-HAA03600	1035623

Other models and accessories → www.sick.com/ARS60

Detailed technical data

Safety-related parameters

$MTTF_D$ (mean time to dangerous failure)	300 years (EN ISO 13849-1) [1]

[1] This product is a standard product and does not constitute a safety component as defined in the Machinery Directive. Calculation based on nominal load of components, average ambient temperature 40 °C, frequency of use 8760 h/a. All electronic failures are considered hazardous. For more information, see document no. 8015532.

Performance

Number of steps per revolution (max. resolution)	3,600
Measuring step	360 ° /number of steps
Measuring step deviation	0.016 ° non-binary number of steps
Error limits G	0.046 ° (non-binary number of steps) [1]
Repeatability standard deviation σ_r	0.005 ° [2]

[1] In accordance with DIN ISO 1319-1, position of the upper and lower error limit depends on the installation situation, specified value refers to a symmetrical position, i.e. deviation in upper and lower direction is the same.
[2] In accordance with DIN ISO 55350-13; 68.3% of the measured values are inside the specified area.

Interfaces

Communication interface	Parallel data world
Initialization time	80 ms [1]
Code type	Binary
Code sequence parameter adjustable	CW (clockwise) increasing when viewing the clockwise rotating shaft
Measured value backlash	0.005 °
Response threshold	0.003 °

[1] Valid positional data can be read once this time has elapsed.

Electronics

Connection type	Male connector, M23, 21-pin, radial
Supply voltage	10 ... 32 V

[1] Only with shaft stationary (note initialisation time).

Operating current	Typ. 90 mA
Switching level of control inputs	Logic H = 0.7 x U_S, Logic L = 0 V ... 0.3 x U_S
Actuation of set button	≥ 100 ms [1]

[1] Only with shaft stationary (note initialisation time).

Mechanics

Mechanical design	Blind hollow shaft
Shaft diameter	15 mm [1]
Characteristics of the shaft	Front clamp
Weight	Approx. 0.3 kg [2]
Housing material	Aluminum die cast
Start up torque	Typ. 0.6 Ncm
Operating torque	Typ. 0.4 Ncm
Permissible movement static	± 0.3 mm (radial) ± 0.5 mm (axial)
Permissible movement dynamic	± 0.1 mm (radial) ± 0.2 mm (axial)
Operating speed	≤ 3,000 min^{-1}
Moment of inertia of the rotor	See figure
Bearing lifetime	3.6 x 10^9 revolutions
Angular acceleration	≤ 500,000 rad/s^2

[1] Collets for 6, 8, 10, 12, 14 mm and 1/4", 3/8" and 1/2" as accessories, separate order item. For 15 mm shaft diameter collet is not needed.
[2] Based on devices with male connector.

Ambient data

EMC	According to EN 61000-6-2 and EN 61000-6-3 [1]
Enclosure rating	IP65, male connector (IEC 60529) [2]
Permissible relative humidity	90 % (Condensation not permitted)
Operating temperature range	–20 °C ... +85 °C
Storage temperature range	–40 °C ... +100 °C, without package
Resistance to shocks	50 g, 11 ms (EN 60068-2-27)
Resistance to vibration	20 g, 10 Hz ... 2,000 Hz (EN 60068-2-6)

[1] EMC according to the standards quoted is achieved if shielded cables are used.
[2] With mating connector fitted.

Classifications

ECLASS 5.0	27270502
ECLASS 5.1.4	27270502
ECLASS 6.0	27270590
ECLASS 6.2	27270590
ECLASS 7.0	27270502
ECLASS 8.0	27270502
ECLASS 8.1	27270502
ECLASS 9.0	27270502

ECLASS 10.0	27270502
ECLASS 11.0	27270502
ECLASS 12.0	27270502
ETIM 5.0	EC001486
ETIM 6.0	EC001486
ETIM 7.0	EC001486
ETIM 8.0	EC001486
UNSPSC 16.0901	41112113

Certificates

EU declaration of conformity	✓
UK declaration of conformity	✓
ACMA declaration of conformity	✓
China-RoHS	✓
cULus certificate	✓
Information according to Art. 3 of Data Act (Regulation EU 2023/2854)	✓

Dimensional drawing

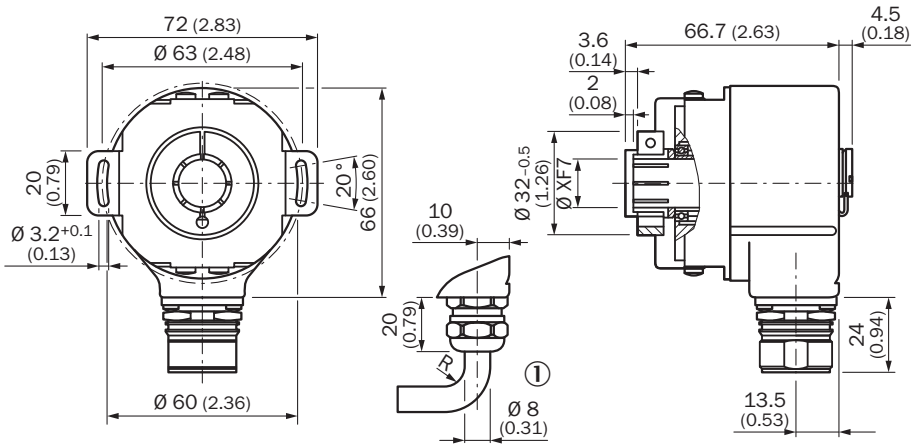

Dimensions in mm (inch)
General tolerances according to DIN ISO 2768-mk
① R = min. bending radius 40 mm

PIN assignment

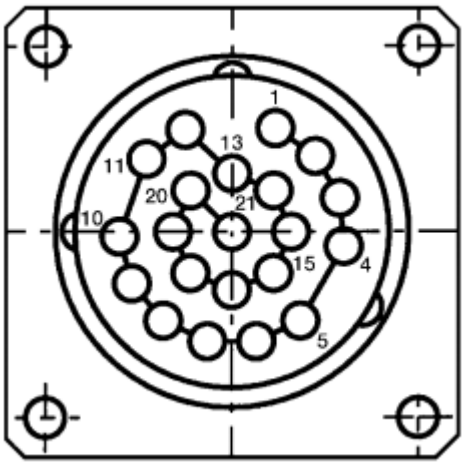

PIN	Wire colors (cable connection)	SignalBinary	SignalGray	SignalBCD	
1	Violet	2^0	G^0	2^0 v. 10^0	–
2	White/brown	2^1	G^1	2^1 v. 10^0	–
3	White/green	2^2	G^2	2^2 v. 10^0	–
4	White/yellow	2^3	G^3	2^3 v. 10^0	–
5	White/grey	2^4	G^4	2^0 v. 10^1	–
6	White/pink	2^5	G^5	2^1 v. 10^1	–
7	White/blue	2^6	G^6	2^2 v. 10^1	–
8	White/red	2^7	G^7	2^3 v. 10^1	–
9	White/black	2^8	G^8	2^0 v. 10^2	–
10	Brown/green	2^9	G^9	2^1 v. 10^2	–
11	Brown/yellow	2^{10}	G^{10}	2^2 v. 10^2	–
12	Brown/gray	2^{11}	G^{11}	2^3 v. 10^2	–
13	Brown/pink	2^{12}	G^{12}	2^0 v. 10^3	–
14	Brown/blue	2^{13}	G^{13}	2^1 v. 10^3	–
15	Brown/red	2^{14}	G^{14}	2^2 v. 10^3	–
16	Green	Parity		Parity	
17	Pink		Store		–
18	Yellow		Enable		–
19	Brown		CW/CCW (V/R)		–
*	Gray		SET		–
20	Blue		GND		–
21	Red		U_S		–

Diagrams

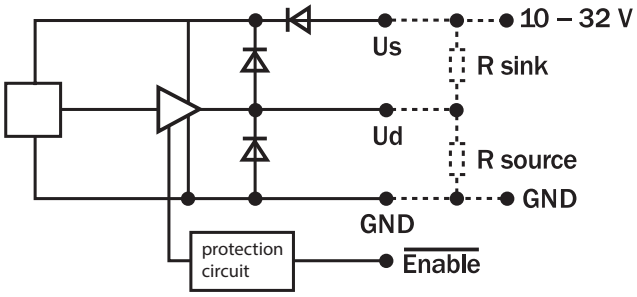

Diagrams Moment of inertia of the rotor

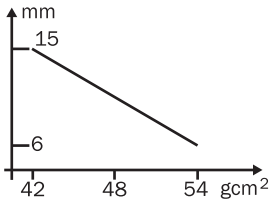

blind hollow shaft

Recommended accessories

Other models and accessories ➜ www.sick.com/ARS60

	Brief description	Type	part no.
connectors and cables			
	• **Connection type head A:** Flying leads • **Connection type head B:** Flying leads • **Signal type:** Parallel • **Items supplied:** By the meter • **Cable:** 22-wire, PUR, halogen-free • **Description:** Parallel, shielded	LTG-2622-MW	6027532
	• **Connection type head A:** Female connector, M23, 21-pin, straight, A-coded • **Signal type:** SSI • **Description:** SSI, shielded • **Connection systems:** Crimp contacts	DOS-2321-G	6027539
	• **Connection type head A:** Female connector, M23, 21-pin, straight • **Connection type head B:** Flying leads • **Signal type:** Parallel • **Cable:** 1.5 m, 22-wire, PUR, halogen-free • **Description:** Parallel, shielded	DOL-2321-G1M5PA4	2029218
	• **Connection type head A:** Female connector, M23, 21-pin, straight • **Connection type head B:** Flying leads • **Signal type:** Parallel • **Cable:** 3 m, 22-wire, PUR, halogen-free • **Description:** Parallel, shielded	DOL-2321-G03MPA4	2029219
	• **Connection type head A:** Female connector, M23, 21-pin, straight • **Connection type head B:** Flying leads • **Signal type:** Parallel • **Cable:** 5 m, 22-wire, PUR, halogen-free • **Description:** Parallel, shielded	DOL-2321-G05MPA4	2029220
	• **Connection type head A:** Female connector, M23, 21-pin, straight • **Connection type head B:** Flying leads • **Signal type:** Parallel • **Cable:** 10 m, 22-wire, PUR, halogen-free • **Description:** Parallel, shielded	DOL-2321-G10MPA4	2029221
	• **Connection type head A:** Female connector, M23, 21-pin, straight • **Connection type head B:** Flying leads • **Signal type:** Parallel • **Cable:** 20 m, 22-wire, PUR, halogen-free • **Description:** Parallel, shielded	DOL-2321-G20MPA4	2029222

	Brief description	Type	part no.
shaft adaptation			
	• **Product segment:** Shaft adaptation • **Product:** Collets • **Description:** Collet for blind hollow shaft, shaft diameter 6 mm, outer diameter 15 mm	SPZ-006-AD-A	2029174
	• **Product segment:** Shaft adaptation • **Product:** Collets • **Description:** Collet for blind hollow shaft, shaft diameter 1/4" (6.35 mm), outer diameter 15 mm	SPZ-1E4-AD-A	2029175
	• **Product segment:** Shaft adaptation • **Product:** Collets • **Description:** Collet for blind hollow shaft, shaft diameter 8 mm, outer diameter 15 mm	SPZ-008-AD-A	2029176
	• **Product segment:** Shaft adaptation • **Product:** Collets • **Description:** Collet for blind hollow shaft, shaft diameter 3/8" (9.525 mm), outer diameter 15 mm	SPZ-3E8-AD-A	2029177
	• **Product segment:** Shaft adaptation • **Product:** Collets • **Description:** Collet for blind hollow shaft, shaft diameter 10 mm, outer diameter 15 mm	SPZ-010-AD-A	2029178
	• **Product segment:** Shaft adaptation • **Product:** Collets • **Description:** Collet for blind hollow shaft, shaft diameter 12 mm, outer diameter 15 mm	SPZ-012-AD-A	2029179
	• **Product segment:** Shaft adaptation • **Product:** Collets • **Description:** Collet for blind hollow shaft, shaft diameter 1/2" (12.7 mm), outer diameter 15 mm	SPZ-1E2-AD-A	2029180

SICK AT A GLANCE

SICK is one of the leading manufacturers of intelligent sensors and sensor solutions for industrial applications. A unique range of products and services creates the perfect basis for controlling processes securely and efficiently, protecting individuals from accidents and preventing damage to the environment.

We have extensive experience in a wide range of industries and understand their processes and requirements. With intelligent sensors, we can deliver exactly what our customers need. In application centers in Europe, Asia and North America, system solutions are tested and optimized in accordance with customer specifications. All this makes us a reliable supplier and development partner.

Comprehensive services complete our offering: SICK LifeTime Services provide support throughout the machine life cycle and ensure safety and productivity.

For us, that is “Sensor Intelligence.”

WORLDWIDE PRESENCE:

Contacts and other locations –www.sick.com