CUI Devices is now Same Sky! Learn More

same sky

Additional Resources: Product Page | 3D Model | PCB Footprint

MODEL: MJ-63042J | DESCRIPTION: AUDIO JACK

FEATURES

- through hole
- right angle
- tip and sleeve switch
- sleeve switch normally open
- open housing design



RoHS

SPECIFICATIONS

parameter	conditions/description	min	typ	max	units
rated input voltage			12		Vdc
rated input current				1	A
contact resistance	between terminal and mating plug			30	mΩ
insulation resistance	at 500 Vdc	100			MΩ
voltage withstand	for 1 minute			500	Vac
insertion/withdrawal force		0.4		3	kg
operating temperature		-25		70	°C
life			5,000		cycles
flammability rating	see material table				
RoHS	yes				

SOLDERABILITY

parameter	conditions/description	min	typ	max	units
wave soldering	dipped in solder pot for 3~5 seconds		260		°C

MECHANICAL DRAWING

units: mm
tolerance: ±0.3 mm

ITEM	DESCRIPTION	MATERIAL	PLATING/COLOR
1	sleeve spring	phosphor bronze	silver
2	sleeve shunt	phosphor bronze	silver
3	tip spring	phosphor bronze	silver
4	tip shunt	bronze	silver
5	bottom spring	phosphor bronze	silver
6	housing	PA66 (UL94V-0)	black
7	nut	brass	nickel
8	bushing	PA66 (UL94V-0)	black
9	washer	paper	red

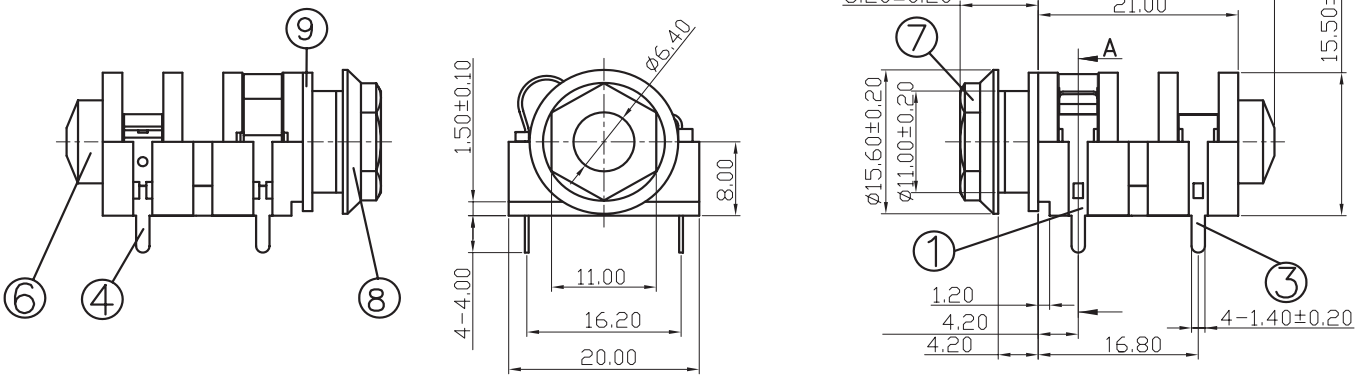

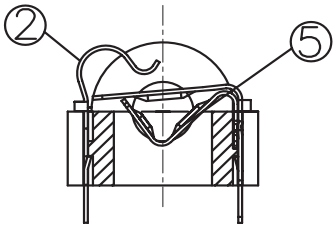

A−A

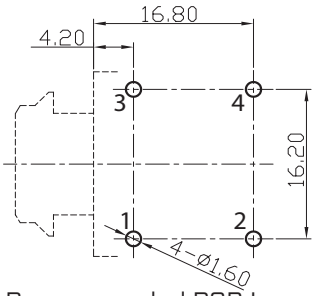

Recommended PCB Layout
Top View

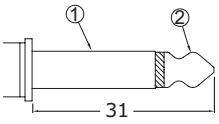

Ø6.35 MATING PLUG

Model No.	MJ-63042J
Schematic	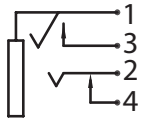
PIN	
1	sleeve
2	tip
3	sleeve switch (N-O)
4	tip switch (N-C)

REVISION HISTORY

rev.	description	date
1.0	initial release	08/11/2020
1.01	logo, datasheet style update	08/17/2022
1.02	CUI Devices rebranded to Same Sky	09/12/2024

The revision history provided is for informational purposes only and is believed to be accurate.

same sky

Same Sky offers a one (1) year limited warranty. Complete warranty information is listed on our website.

Same Sky reserves the right to make changes to the product at any time without notice. Information provided by Same Sky is believed to be accurate and reliable. However, no responsibility is assumed by Same Sky for its use, nor for any infringements of patents or other rights of third parties which may result from its use.

Same Sky products are not authorized or warranted for use as critical components in equipment that requires an extremely high level of reliability. A critical component is any component of a life support device or system whose failure to perform can be reasonably expected to cause the failure of the life support device or system, or to affect its safety or effectiveness.

sameskydevices.com