Data sheet | Item number: 855-8004

Power tap; without fuse; 10 mm² (8 AWG) - 16 mm² (6 AWG); N-conductor

www.wago.com/855-8004



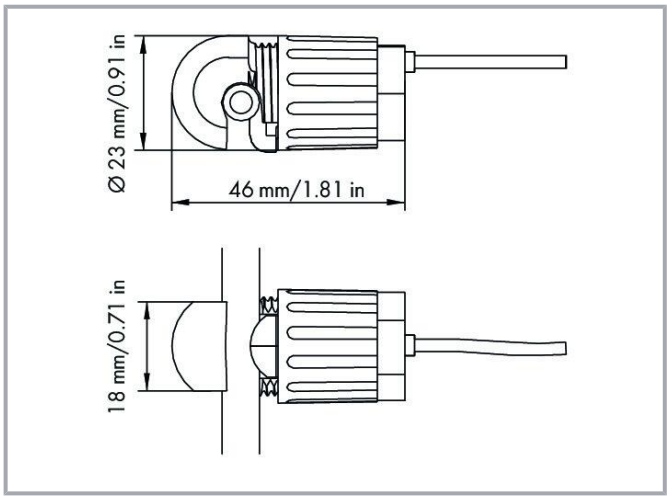

Item description

Short description:

WAGO's Power Taps (855 Series) easily and safely tap the measurement voltage.

This allows a fuse-protected measurement voltage to be tapped from an insulated conductor with just one turn – no tools required.

Features:

- Safely tap the measurement voltage with just one turn
- Tool-free assembly
- Secure mounting

Subject to changes. Please also observe the further product documentation!

WAGO GmbH & Co. KG
Hansastr. 27
32423 Minden
Phone: +49571 887-0 | Fax: +49571 887-169
Email: info.de@wago.com | Web: www.wago.com

Do you have any questions about our products?
We are always happy to take your call at +49 (571) 887-44222.

- Cable length: 3 m

Data
Technical data

Input

Measured variable	Voltage

Output – voltage tap

Continuous current (max.)	2 A
Fuse (voltage path)	-
Rated voltage	AC 400 V
Voltage drop	≤ 0.5 VAC

Safety and protection

Rated surge voltage	6 kV
Overvoltage category	III
Pollution degree	2
Protection type	IP20
Test voltage	AC 3 kV; 50 Hz; 1 min

Connection data

Feedthrough for measurement conductor	5 … 7 mm Ø
Cable type	Secondary side: 1 x 1.0 mm²; flexible; with ferrule

Connection 1

Connection technology	IDC connection
Solid conductor	10 … 16 mm² / 8 … 6 AWG
Fine-stranded conductor	10 … 16 mm² / 8 … 6 AWG

Physical data

Cable length	3 m
Width	23 mm / 0.906 inches
Height	50 mm / 1.969 inches
Depth	23 mm / 0.906 inches

Subject to changes. Please also observe the further product documentation!

WAGO GmbH & Co. KG
Hansastr. 27
32423 Minden
Phone: +49571 887-0 | Fax: +49571 887-169
Email: info.de@wago.com | Web: www.wago.com

Do you have any questions about our products?
We are always happy to take your call at +49 (571) 887-44222.

Mechanical data

Mounting type	Insulation displacement connection
Mounting type	Mounting on insulated round cable
Torque range	1.5 … 2 Nm
Usability	Can be reused several times (max. 24 times)

Material data

Housing material	PA 66
Weight	21 g

Environmental requirements

Ambient temperature (operation)	-5 … +55 °C
Ambient temperature (storage)	-20 … +70 °C
Relative humidity	5 … 85 % (without condensation)
Operating altitude (max.)	2000 m

Standards and specifications

Conformity marking	CE
Standards/specifications	EN 60947-7-1

Commercial data

eCl@ss 10.0	27-14-11-92
eCl@ss 9.0	27-14-11-92
ETIM 8.0	EC002848
ETIM 7.0	EC002848
ECCN	NO DATA
PU (SPU)	10 (1) pcs
Packaging type	Box
Country of origin	NL
Customs tariff number	85366990990

Environmental Product Compliance

RoHS Compliance Status	Compliant,No Exemption

Subject to changes. Please also observe the further product documentation!

WAGO GmbH & Co. KG
Hansastr. 27
32423 Minden
Phone: +49571 887-0 | Fax: +49571 887-169
Email: info.de@wago.com | Web: www.wago.com

Do you have any questions about our products?
We are always happy to take your call at +49 (571) 887-44222.

Approvals / Certificates

General approvals

Logo	Approval	Additional Approval Text	Certificate name
	EAC GZO Almaty Standart	TP TC 004/2011	EAC CoC 03082

Optional accessories

Mounting

Current transformer terminal block



Item no.: 2007-8874
Compact terminal block; for current and voltage transformers; 6,00 mm²; multicoloured
www.wago.com/2007-8874



Item no.: 2007-8877
Compact terminal block; for current transformer circuit; 6,00 mm²; multicoloured
www.wago.com/2007-8877



Item no.: 2007-8875
Compact terminal block; for current transformer circuit; 6,00 mm²; multicoloured
www.wago.com/2007-8875



Item no.: 2007-8876
Compact terminal block; for 3-phase current transformer circuit; 6,00 mm²; multicoloured
www.wago.com/2007-8876



Item no.: 2007-8873
Compact terminal block; for current and voltage transformers; 6,00 mm²; multicoloured
www.wago.com/2007-8873

Signal conditioner

Power measurement module



Item no.: 2857-570/024-001
3-Phase Power Measurement Module; 3x277/480 V/1 A; Modbus RTU; Digital output; Configuration via software; Supply voltage: 24 VDC
www.wago.com/2857-570/024-001



Item no.: 2857-570/024-005
3-Phase Power Measurement Module; 3x277/480 V/5 A; Modbus RTU; Digital output; Configuration via software; Supply voltage: 24 VDC
www.wago.com/2857-570/024-005

Subject to changes. Please also observe the further product documentation!

WAGO GmbH & Co. KG
Hansastr. 27
32423 Minden
Phone: +49571 887-0 | Fax: +49571 887-169
Email: info.de@wago.com | Web: www.wago.com

Do you have any questions about our products?
We are always happy to take your call at +49 (571) 887-44222.



Item no.: 2857-570/024-000
3-Phase Power Measurement Module; 3x277/480 V/RC; Modbus RTU; Digital output; Configuration via software; Supply voltage: 24 VDC
www.wago.com/2857-570/024-000

Voltage signal conditioner



Item no.: 857-560
Voltage signal conditioner; Voltage input signal; Current and voltage output signal; Digital output; Configuration via software; Supply voltage: 24 VDC; 6 mm module width
www.wago.com/857-560

Current signal conditioner



Item no.: 857-569
Power signal conditioner; Current and voltage input signal; Current and voltage output signal; Digital output; Configuration via software; Supply voltage: 24 VDC; 6 mm module width
www.wago.com/857-569

Downloads

Documentation

Bid Text

855-8004 docx - Datei	2019 年2月20 日	docx 17.6 kB	Download
855-8004 X81 - Datei	2019 年2月19 日	xml 5.1 kB	Download

Instruction Leaflet

Potentialabgriffe		pdf 79.6 kB	Download

Additional Information

Disposal and Recycling Electrical and electronic equipment, Batteries, Packaging	V 1.1.0 2022 年8月18 日	pdf 2.2 MB	Download

Environmental Product Compliance

Compliance Search

Environmental Product Compliance 855-8004 Power tap; without fuse; 10 mm² (8 AWG) - 16 mm² (6 AWG); N-conductor	URL	Download

Subject to changes. Please also observe the further product documentation!

WAGO GmbH & Co. KG
Hansastr. 27
32423 Minden
Phone: +49571 887-0 | Fax: +49571 887-169
Email: info.de@wago.com | Web: www.wago.com

Do you have any questions about our products?
We are always happy to take your call at +49 (571) 887-44222.

Installation Notes

Installation

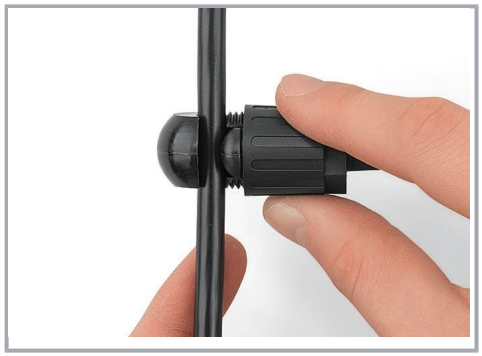

Installation on an insulated conductor with insulation displacement connection (IDC)

Subject to changes. Please also observe the further product documentation!

WAGO GmbH & Co. KG
Hansastr. 27
32423 Minden
Phone: +49571 887-0 | Fax: +49571 887-169
Email: info.de@wago.com | Web: www.wago.com

Do you have any questions about our products?
We are always happy to take your call at +49 (571) 887-44222.