CUI DEVICES

MODEL: SJ-3551B-MSMT-TR-67 | **DESCRIPTION:** AUDIO JACK

FEATURES
- IP67 waterproof
- mid surface mount
- angle insertion hole
- reflow solder compatible



SPECIFICATIONS

parameter	conditions/description	min	typ	max	units
rated input voltage			12		Vdc
rated input current				1	A
contact resistance[1]	between terminal and mating plug between terminal and shunt			50 50	mΩ mΩ
insulation resistance	at 500 Vdc between adjacent contacts	100			MΩ
voltage withstand	for 1 minute between adjacent contacts			250	Vac
insertion/withdrawal force		0.4		3	kgf
operating temperature		-30		85	°C
storage temperature		-40		85	°C
life	at a rate of 500 cycles/hour		10,000		cycles
flammability rating	UL94V-0				
RoHS	yes				
IP level	IP67				

Note: 1. When measured at a current of less than 100 mA/1 kHz
2. All specifications measured at 10~35°C, humidity at 45~85%, under standard atmospheric pressure, unless otherwise noted.

SOLDERABILITY

parameter	conditions/description	min	typ	max	units
reel storage	at relative humidity <60%			30	°C
reflow soldering[3]	see reflow profile		260	270	°C

Note: 3. It is recommended to reflow solder within 72 hours from opening vacuum packaging at a temperature <30°C & relative humidity <60%.

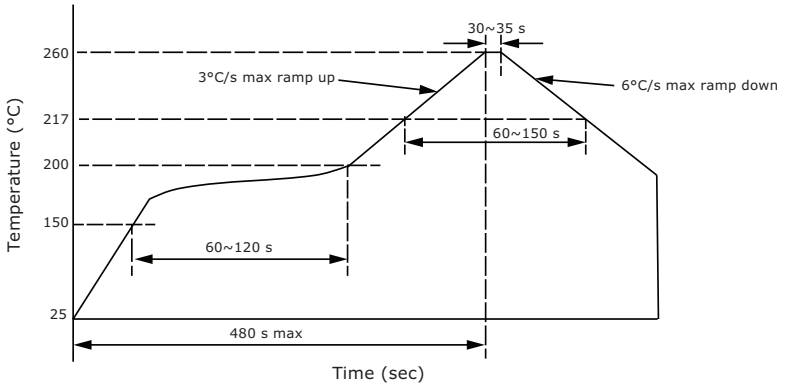

MECHANICAL DRAWING

units: mm
tolerance:
X.X ±0.3 mm
X.XX ±0.20 mm
PCB: ±0.05 mm

	MATERIAL	PLATING
housing 2	PA-9T	black
housing 1	PA-9T	black
assist pin	stainless steel	
GND contact	PBS	contact: 5 μ" gold others: gold flash
ring 2 contact	PBS	
tip contact	titaninum copper alloy	
term. 5 contact	PBS	
term. 6 contact	PBS	
ring 1 contact	PBS	
o-ring (OR-50)	silicone	black

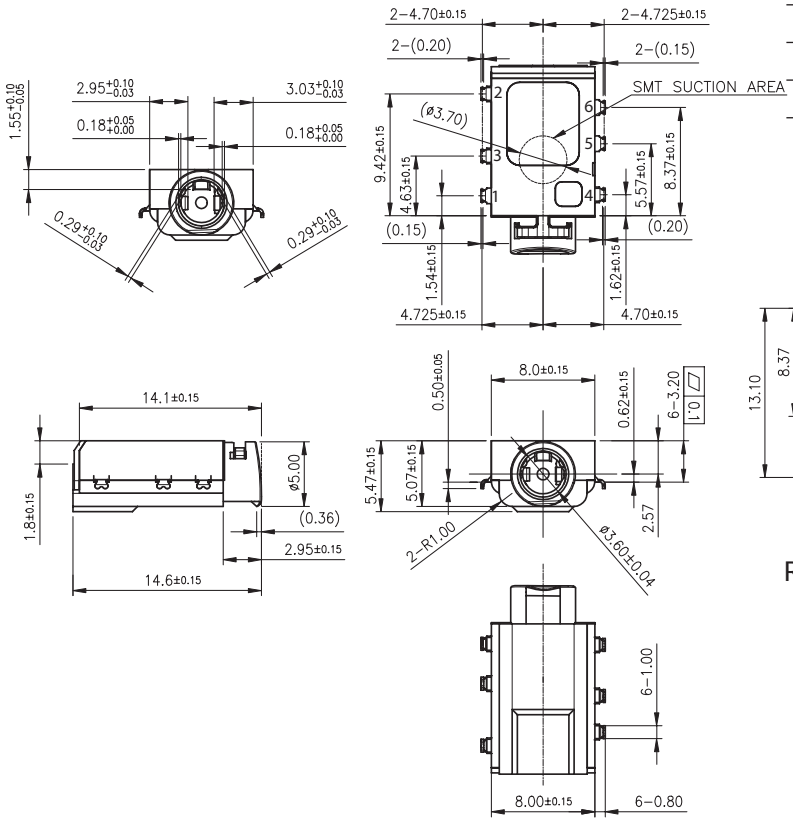

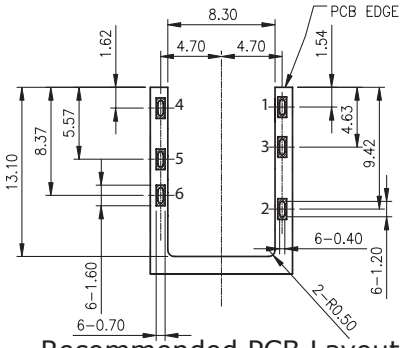

Recommended PCB Layout
Top View

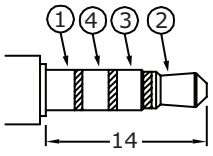

Ø3.5 MATING PLUG

Schematic	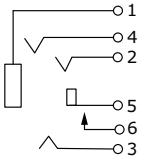
PIN	
1	sleeve
2	tip
3	ring 1
4	ring 2
5	isolated tip
6	isolated tip switch (N-O)

O-ring (P/N: OR-50)

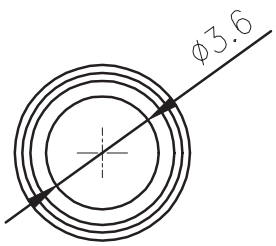

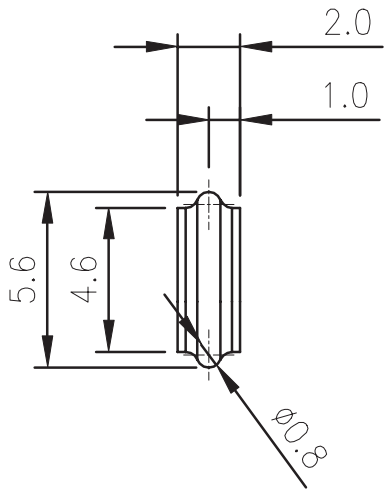

ASSEMBLY REFERENCE

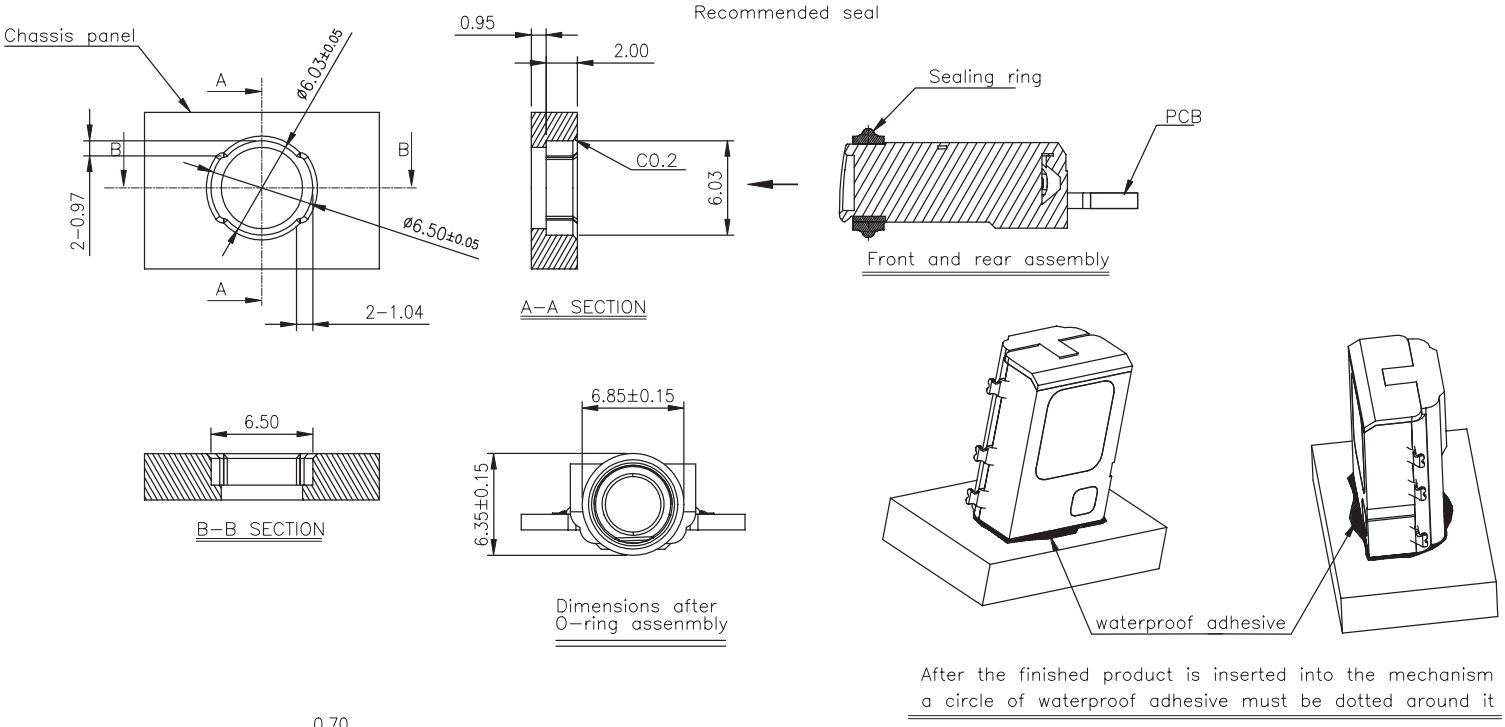

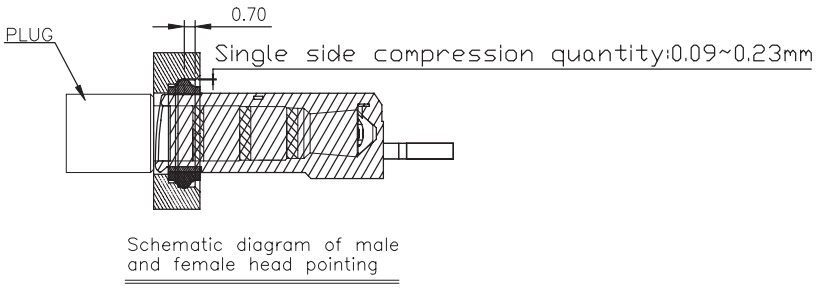

PACKAGING

units: mm

Reel Size: Ø330 mm
Reel QTY: 600 pcs per reel

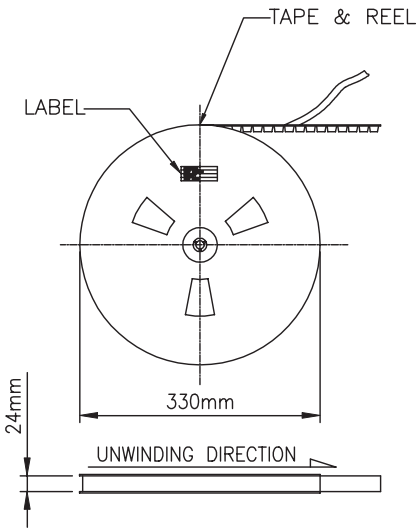

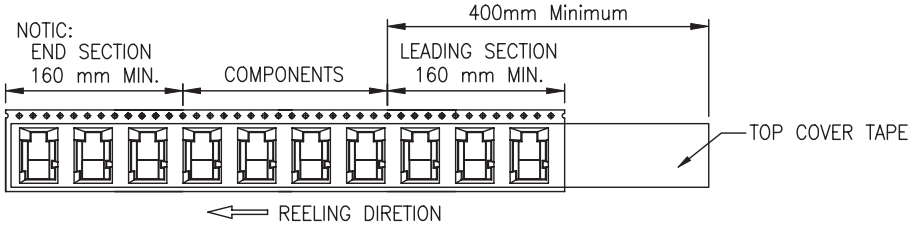

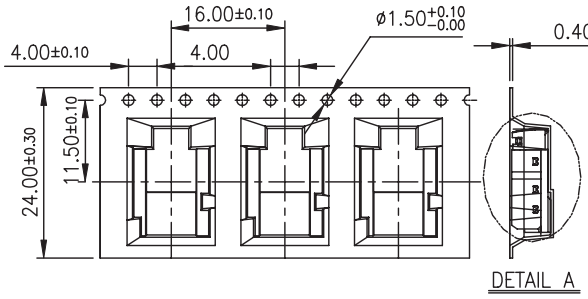

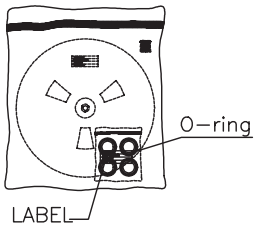

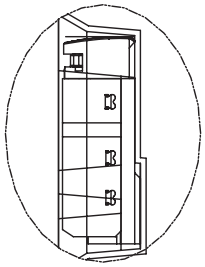

REVISION HISTORY

rev.	description	date
1.0	initial release	12/05/2018
1.01	changed GND contact plating to be gold, moved o-rings to vacuum bag	08/08/2019
1.02	brand update	10/08/2019
1.03	added o-ring p/n	04/07/2022

The revision history provided is for informational purposes only and is believed to be accurate.

CUI DEVICES

CUI Devices offers a one (1) year limited warranty. Complete warranty information is listed on our website.

CUI Devices reserves the right to make changes to the product at any time without notice. Information provided by CUI Devices is believed to be accurate and reliable. However, no responsibility is assumed by CUI Devices for its use, nor for any infringements of patents or other rights of third parties which may result from its use.

CUI Devices products are not authorized or warranted for use as critical components in equipment that requires an extremely high level of reliability. A critical component is any component of a life support device or system whose failure to perform can be reasonably expected to cause the failure of the life support device or system, or to affect its safety or effectiveness.

cuidevices.com