GW MODBUS TCP/ASCII 2E/4DB9 - Interface converters

2702771

https://www.phoenixcontact.com/us/products/2702771

Please be informed that the data shown in this PDF document is generated from our online catalog. Please find the complete data in the user documentation. Our general terms of use for downloads are valid.



The GW MODBUS TCP/ASCII... converts RAW or ASCII serial strings into Modbus registers. Includes two RJ45 ports and four D-SUB 9 ports.

Commercial data

Item number	2702771
Packing unit	1 pc
Minimum order quantity	1 pc
Sales key	DN09
Product key	DNC323
Catalog page	Page 355 (C-6-2019)
GTIN	4055626339399
Weight per piece (including packing)	246 g
Weight per piece (excluding packing)	195 g
Customs tariff number	85176200
Country of origin	US

Technical data

Notes

Utilization restriction

EMC note	EMC: class A product, see manufacturer's declaration in the download area

Utilization restriction

CCCex note	Use in potentially explosive areas is not permitted in China.

Product properties

Product type	Interface converter
MTBF	63.5 Years (Telcordia standard, 25°C temperature, 50% stress, Environmental Factor = 1.0)
	42.3 Years (Telcordia standard, 40°C temperature, 50% stress, Environmental Factor = 1.5)

Electrical properties

Electrical isolation	IEC UL 61010-1 (VCC // Ethernet)
Test voltage data interface/data interface	1.5 kV_{rms} (50 Hz, 1 min.)
Test voltage data interface/power supply	1.5 kV_{rms} (50 Hz, 1 min.)
	1.5 kV_{rms}

Supply

Supply voltage range	10.8 V DC ... 30 V DC (via pluggable COMBICON screw terminal block)
Typical current consumption	110 mA (24 V DC)
Max. current consumption	120 mA (24 V DC)

Function

Management	Web-based management
Status and diagnostic indicators	LEDs: Status, ACT/LNK (Ethernet data traffic)

Connection data

Supply

Conductor cross section, flexible	0.20 mm² ... 2.50 mm²
Conductor cross section AWG	24 ... 12
Tightening torque	0.5 Nm ... 0.6 Nm

Interfaces

Signal	Ethernet
	Modbus
Web server	yes

Data: Modbus/TCP

Serial transmission speed	10/100 Mbps, auto negotiation

Connection method	RJ45 jack, shielded
No. of channels	2
Transmission length	≤ 100 m (shielded twisted pair)
Auxiliary protocols	ARP, DHCP (Client), PING

Data: RS-232

Serial transmission speed	0.3; 0.6; 1.2; 2.4; 4.8; 9.6; 19.2; 38.4; 57.6; 115.2; 230.4 Kbps
Number of connections	4
Connection method	D-SUB 9 plug
Pin assignment	DTE
Transmission length	15 m
File format/coding	5/6/7/8 Data bits, 1/2 Stop bits, None/Even/Odd/Mark/Space Parity
Data flow control/protocols	Software handshake, Xon/Xoff or hardware handshake RTS/CTS

Data: RS-422

Serial transmission speed	0.3; 0.6; 1.2; 2.4; 4.8; 9.6; 19.2; 38.4; 57.6; 115.2; 230.4 Kbps
Number of connections	4
Connection method	D-SUB 9 plug
Pin assignment	2, 3, 5, 7, 8
Transmission length	≤ 1200 m
Termination resistor	120 Ω (configurable)
File format/coding	5/6/7/8 Data bits, 1/2 Stop bits, None/Even/Odd/Mark/Space Parity

Data: RS-485

Serial transmission speed	0.3; 0.6; 1.2; 2.4; 4.8; 9.6; 19.2; 38.4; 57.6; 115.2; 230.4 Kbps
Number of connections	4
Connection method	D-SUB 9 plug
Pin assignment	3, 5, 7
Termination resistor	120 Ω (configurable)
File format/coding	5/6/7/8 Data bits, 1/2 Stop bits, None/Even/Odd/Mark/Space Parity

Dimensions

Width	45 mm
Height	99 mm
Depth	115 mm

Material specifications

Color	gray
Housing material	PA 6.6

Environmental and real-life conditions

Ambient conditions

Degree of protection	IP20

Ambient temperature (operation)	-40 °C ... 70 °C
Ambient temperature (storage/transport)	-40 °C ... 80 °C
Altitude	< 2000 m
Permissible humidity (operation)	10 % ... 95 % (non-condensing)
Permissible humidity (storage/transport)	5 % ... 95 % (non-condensing)

Approvals

Conformity/Approvals

Conformance	CE-compliant
UL, USA	UL 61010-1
UL, USA / Canada	Class I, Div. 2, Groups A, B, C, D T4A
Noxious gas test	ISA-S71.04-1985 G3 Harsh Group A

Ex data

ATEX	DEMKO 18ATEX 2026X: II 3 G Ex ec IIC T4 Gc
IECEx	IECEx UL 18.0023X Ex ec IIC T4 Gc

EMC data

Noise immunity	EN 61000-6-2:2005
Electromagnetic compatibility	Conformance with EMC Directive 2014/30/EU
Noise emission	EN 61000-6-4

Standards and regulations

Standards/regulations	EN 55022, EN 55024

Mounting

Mounting type	DIN rail mounting

Drawings

Block diagram

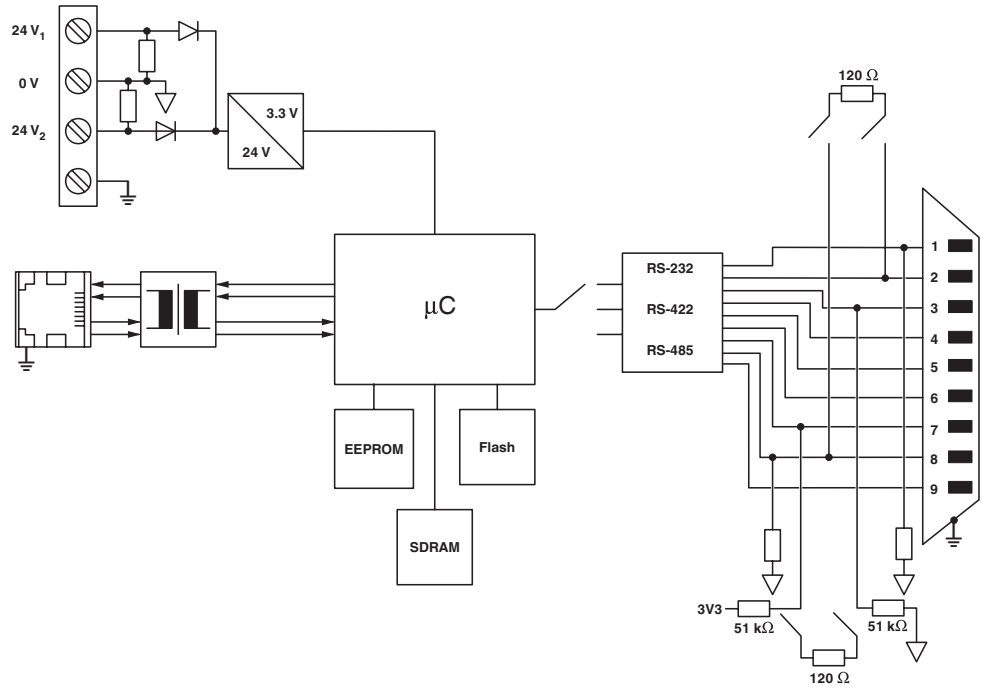

Approvals

To download certificates, visit the product detail page: https://www.phoenixcontact.com/us/products/2702771

UL Listed
Approval ID: FILE E 238705

cUL Listed
Approval ID: FILE E 238705

cUL Listed
Approval ID: FILE E 196811

UL Listed
Approval ID: FILE E 196811

IECEx
Approval ID: IECEx UL 18.0023X

ATEX
Approval ID: DEMKO 18 ATEX 2026X

IECEx
Approval ID: IECEx UL 18.0023X

ATEX
Approval ID: DEMKO 18 ATEX 2026X

cULus Listed

cULus Listed

Classifications

ECLASS

ECLASS-11.0	27242208
ECLASS-12.0	27242208
ECLASS-13.0	27242208

ETIM

ETIM 9.0	EC001423

UNSPSC

UNSPSC 21.0	43222600

Environmental product compliance

EU RoHS

Fulfills EU RoHS substance requirements	Yes, No exemptions

China RoHS

Environment friendly use period (EFUP)	EFUP-50
	An article-related China RoHS declaration table can be found in the download area for the respective article under "Manufacturer declaration". For all articles with EFUP-E, no China RoHS declaration table issued and required.

EU REACH SVHC

REACH candidate substance (CAS No.)	No substance above 0.1 wt%

Accessories

PSM-KA9SUB9/BB/2METER - Data cable

2799474

https://www.phoenixcontact.com/us/products/2799474

RS-232 cable, 9-pos. D-SUB socket on 9-pos. D-SUB socket, 9-wire, 1:1



SUBCON 9/F-SH - D-SUB bus connector

2761499

https://www.phoenixcontact.com/us/products/2761499

D-SUB plug, 9-pos. female connector, one 35° cable entry, universal type for all systems, pin assignment: 1, 2, 3, 4, 5, 6, 7, 8, 9 to screw connection terminal block



SUBCON-PLUS-F/AX 9 - D-SUB bus connector

2311797

https://www.phoenixcontact.com/us/products/2311797



D-SUB connector, 9-pos. female connector, axial version with two cable entries, universal type for all systems, pin assignment: 1, 2, 3, 4, 5, 6, 7, 8, 9 to screw connection terminal block

PSM-AD-D9-NULLMODEM - Adapter

2708753

https://www.phoenixcontact.com/us/products/2708753

V.24 (RS-232) zero modem connector



FL CAT5 PATCH 0,5 - Patch cable

2832263

https://www.phoenixcontact.com/us/products/2832263



Patch cable, CAT5, assembled, 0.5 m

FL CAT5 PATCH 5,0 - Patch cable

2832580

https://www.phoenixcontact.com/us/products/2832580



Patch cable, CAT5, assembled, 5 m

GW MODBUS TCP/ASCII 2E/4DB9 - Interface converters

2702771

https://www.phoenixcontact.com/us/products/2702771

FL SWITCH SFN 5TX - Industrial Ethernet Switch

2891152

https://www.phoenixcontact.com/us/products/2891152



Ethernet switch, 5 TP RJ45 ports, automatic detection of data transmission speed of 10 or 100 Mbps (RJ45), autocrossing function

DT-LAN-CAT.6+ - Surge protection device

2881007

https://www.phoenixcontact.com/us/products/2881007



Surge protection in accordance with Class E_A ($CAT6_A$), for Gigabit Ethernet (up to 10 Gbps), token ring, FDDI/CDDI, ISDN, and DS1. Suitable for Power over Ethernet (PoE++ / 4PPoE) “Mode A” and “Mode B”. RJ45 attachment plug with separate grounding cable and ground connection snap-on foot for NS 35 DIN rails.

SUBCON-PLUS 9/F - D-SUB bus connector

2744241

https://www.phoenixcontact.com/us/products/2744241



D-SUB connector, 9-pos. female connector, two 35° cable entries, universal type for all systems, pin assignment: 1, 2, 3, 4, 5, 6, 7, 8, 9 to one screw connection terminal block

SUBCON-PLUS F2 - D-SUB bus connector

2799490

https://www.phoenixcontact.com/us/products/2799490



D-SUB connector, 9-pos. female connector, two 35° cable entries, bus system: CAN, SUCONET K1, K2 (MOELLER), S-BUS (Saia), J-BUS (Merlin Gerin), pin assignment: 2, 3, 4, 5, 7, 9 to two screw connection terminal blocks

NBC-R4AC-R4AC-IE8A/.../... - Patch cable

1411854

https://www.phoenixcontact.com/us/products/1411854

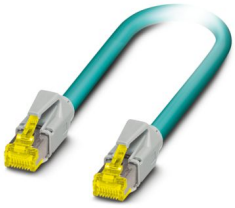

Patch cable, degree of protection: IP20, number of positions: 8, 10 Gbps, $CAT6_A$, cable outlet: straight, Ethernet

NBC-R4AC/10G-R4AC/10G-94F/3,0 - Patch cable

1408365

https://www.phoenixcontact.com/us/products/1408365

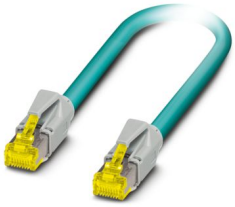

Patch cable, $CAT6_A$, 4-pair, shielded, connection not crossed (line), assembled at both ends with RJ45/IP20 connectors, outer sheath material: PUR, length: 3.0 m

VS-08-RJ45-5-Q/IP20 - RJ45 connector

1656725

https://www.phoenixcontact.com/us/products/1656725



RJ45 connector, design: RJ45, degree of protection: IP20, number of positions: 8, 1 Gbps, CAT5, material: Plastic, connection method: Insulation displacement connection, connection cross section: AWG 26- 23, cable outlet: straight, color: traffic grey A RAL 7042, Ethernet

VS-08-RJ45-10G/Q - RJ45 connector

1419001

https://www.phoenixcontact.com/us/products/1419001



RJ45 connector, design: RJ45, degree of protection: IP20, number of positions: 8, 10 Gbps, $CAT6_A$, material: Plastic, connection method: Insulation displacement connection, connection cross section: AWG 26- 24, cable outlet: straight, color: black, Ethernet

VS-09-BU-DSUB-EG - Contact insert

1688803

https://www.phoenixcontact.com/us/products/1688803



D-SUB contact insert, shell size 1, with nine signal contacts, type of contact socket, with solder cup, straight, fixing with a 3 mm hole, for panel mounting frame and sleeve housing VS-09-...

VS-09-ST-DSUB-EG - Contact insert

1688793

https://www.phoenixcontact.com/us/products/1688793



D-SUB contact insert, shell size 1, with nine signal contacts, type of contact pin, with solder cup, straight, fixing with a 3 mm hole, for panel mounting frame and sleeve housing VS-09-...

CUC-DST-GZNI-S/DSSC9 - D-SUB sleeve housings

1419722

https://www.phoenixcontact.com/us/products/1419722

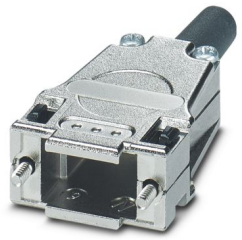

D-SUB sleeve housings, degree of protection: IP20, material: Zinc die-cast, cable outlet: straight, housing size: 1, color: Bare metallic

CUC-DST-GPME-S/DSSC9 - D-SUB sleeve housings

1419705

https://www.phoenixcontact.com/us/products/1419705



D-SUB sleeve housings, degree of protection: IP20, material: ABS, metal-plated, cable outlet: straight, housing size: 1, color: Bare metallic

PSM-ME-RS232/RS232-P - Interface converter

2744461

https://www.phoenixcontact.com/us/products/2744461



Interface converter, for the isolation of RS-232 (V.24) interfaces, 4 channels, rail-mountable

PSM-ME-RS485/RS485-P - Repeater

2744429

https://www.phoenixcontact.com/us/products/2744429



Repeater, for potential separation and range increase in RS-485 2-wire bus systems, 3-way isolation, rail-mountable

TTC-6P-3-HF-F-M-24DC-PT-I - Surge protection device

2906797

https://www.phoenixcontact.com/us/products/2906797



Surge protection, consisting of protective plug and base element, with integrated status indicator and knife disconnection for three signal wires with common reference potential. For HF applications and telecommunications interfaces without supply voltage. Indirect grounding via gas discharge tube, EX e approval for zone 2. Can be used in safety-related circuits up to SIL 3.

TTC-6P-3-HF-F-M-12DC-UT-I - Surge protection device

2906786

https://www.phoenixcontact.com/us/products/2906786



Surge protection, consisting of protective plug and base element, with integrated status indicator and knife disconnection for three signal wires with common reference potential. For HF applications and telecommunications interfaces without supply voltage. Indirect grounding via gas discharge tube, EX e approval for zone 2. Can be used in safety-related circuits up to SIL 3.

Phoenix Contact 2024 © - all rights reserved
https://www.phoenixcontact.com

Phoenix Contact USA
586 Fulling Mill Road
Middletown, PA 17057, United States
(+717) 944-1300
info@phoenixcon.com