VAL-US-120/40/2+1-FM - Type 1 surge protection device

2910352

https://www.phoenixcontact.com/us/products/2910352

Please be informed that the data shown in this PDF document is generated from our online catalog. Please find the complete data in the user documentation. Our general terms of use for downloads are valid.



Surge protective device, three channel with remote indicator contact for 120/240 V split phase AC, 3-wire plus ground.

Commercial data

Item number	2910352
Packing unit	1 pc
Minimum order quantity	1 pc
Sales key	CL17
Product key	CL132U
Catalog page	Page 94 (C-4-2019)
GTIN	4055626444925
Weight per piece (including packing)	309 g
Weight per piece (excluding packing)	283 g
Customs tariff number	85363030
Country of origin	DE

Technical data

Product properties

Product type	Surge protection for NEMA power supply units
Product family	VALVETRAB US
IEC test classification	II
	T2
EN type	T2
IEC power supply system	TN-S
	TT
Type	DIN rail module, two-section, divisible
Number of positions	3
Surge protection fault message	Optical, remote indicator contact

Insulation characteristics

Overvoltage category	III
Pollution degree	2

Electrical properties

Nominal frequency f_N	50 Hz (60 Hz)

Indicator/remote signaling

Connection name	Remote fault indicator contact
Switching function	Changeover contact
Operating voltage	5 V AC ... 250 V AC
	30 V DC
Operating current	5 mA AC ... 1.5 A AC
	1 A DC

Connection data

Connection method	Screw connection
Screw thread	M5
Tightening torque	4.5 Nm (1.5 mm² ... 16 mm²)
	4.5 Nm (25 mm² ... 35 mm²)
Stripping length	16 mm
Conductor cross section flexible	1.5 mm² ... 25 mm²
Conductor cross section rigid	1.5 mm² ... 35 mm²
Conductor cross section AWG	15 ... 2

Remote fault indicator contact

Connection method	Screw connection
Screw thread	M2
Tightening torque	0.25 Nm
Stripping length	7 mm
Conductor cross section flexible	0.14 mm² ... 1.5 mm²

Conductor cross section rigid	0.14 mm² ... 1.5 mm²
Conductor cross section AWG	28 ... 16

Dimensions

Dimensional drawing	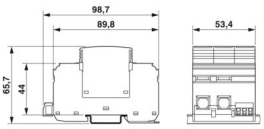
Width	53.4 mm
Height	98.7 mm
Depth	65.7 mm (incl. DIN rail 7.5 mm)
Horizontal pitch	3 Div.

Material specifications

Color	black (RAL 9005)
Flammability rating according to UL 94	V-0
CTI value of material	600
Insulating material	PA 6.6/PBT
Material group	I
Housing material	PA 6.6
	PBT

Protective circuit

Mode of protection	L-N
	L-PE
	N-PE
Direction of action	2L-N & N-GND
Nominal voltage U_N	120/240 V AC (TN-S)
	120/240 V AC (TT)
Nominal frequency f_N	50 Hz (60 Hz)
Rated load current I_L	80 A
Residual current I_{PE}	5 µA
Nominal discharge current I_n (8/20) µs	20 kA
Follow current interrupt rating I_{fi} (N-PE)	100 A (305 V AC)
Short-circuit current rating I_{SCCR}	25 kA
Voltage protection level U_p (L-N)	≤ 0.9 kV
Voltage protection level U_p (L-PE)	≤ 1.6 kV
Voltage protection level U_p (N-PE)	≤ 1.5 kV
Residual voltage U_{res} (L-N)	≤ 0.9 kV (at I_n)
	≤ 0.75 kV (at 10 kA)
	≤ 0.6 kV (at 5 kA)
	≤ 0.55 kV (at 3 kA)
	≤ 1.6 kV (at I_n)

Residual voltage U_{res} (L-PE)	≤ 1.2 kV (at 10 kA)
	≤ 1 kV (at 5 kA)
	≤ 0.9 kV (at 3 kA)
Residual voltage U_{res} (N-PE)	≤ 0.4 kV (at I_n)
	≤ 0.25 kV (at 10 kA)
	≤ 0.15 kV (at 5 kA)
	≤ 0.1 kV (at 3 kA)
TOV behavior at U_T (L-N)	208 V AC (5 s / withstand mode)
	240 V AC (120 min / safe failure mode)
TOV behavior at U_T (N-PE)	1200 V AC (200 ms / withstand mode)
Response time t_A (L-N)	≤ 25 ns
Response time t_A (L-PE)	≤ 100 ns
Response time t_A (N-PE)	≤ 100 ns
Max. backup fuse with V-type through wiring	80 A (gG)
Max. backup fuse with branch wiring	125 A (gG)

Environmental and real-life conditions

Ambient conditions

Degree of protection	IP20 (only when all terminal points are used)
Ambient temperature (operation)	-40 °C ... 80 °C
Ambient temperature (storage/transport)	-40 °C ... 80 °C
Altitude	≤ 2000 m (amsl)
Permissible humidity (operation)	5 % ... 95 %
Shock (operation)	25g (Half-sine / 11 ms / 3x ±X, ±Y, ±Z)
Vibration (operation)	5g (10 ... 500 Hz / 2.5 h / X, Y, Z)

Approvals

UL specifications

Maximum continuous operating voltage MCOV (L-L)	350 V AC
Maximum continuous operating voltage MCOV (L-N)	175 V AC
Maximum continuous operating voltage MCOV (L-G)	175 V AC
Maximum continuous operating voltage MCOV (N-G)	305 V AC
Short-circuit current rating (SCCR)	200 kA
Voltage protection rating VPR (L-L)	1200 V
Voltage protection rating VPR (L-N)	700 V
Voltage protection rating VPR (L-G)	1800 V
Voltage protection rating VPR (N-G)	1200 V
UL type	type 1
Nominal discharge current I_n	20 kA
Maximum Surge Current per Phase	40 kA
Mode of protection	L-L
	L-N
	L-G

	N-G
Nominal voltage	120/240 V AC (Split phase)
Power distribution system	Split phase
Nominal frequency	50/60 Hz
SPD Type	1

UL indicator/remote signaling

Operating voltage	125 V AC
AC operating current	1 A AC

UL connection data

Tightening torque	30 lb_f-in.
Conductor cross section AWG	14 ... 2

Standards and regulations

Air clearances and creepage distances

Standards/regulations	EN 60664-1 / EN 61643-11
Standards/specifications	IEC 61643-11
Note	2011
Standards/specifications	EN 61643-11
Note	2012

Mounting

Mounting type	DIN rail: 35 mm

Drawings

Circuit diagram

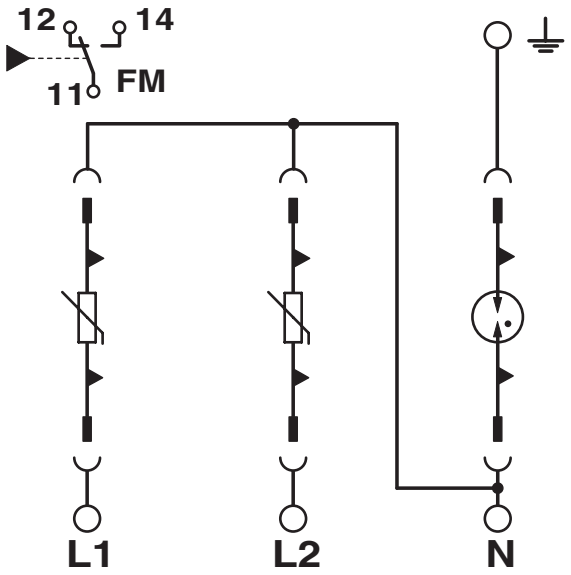

Dimensional drawing

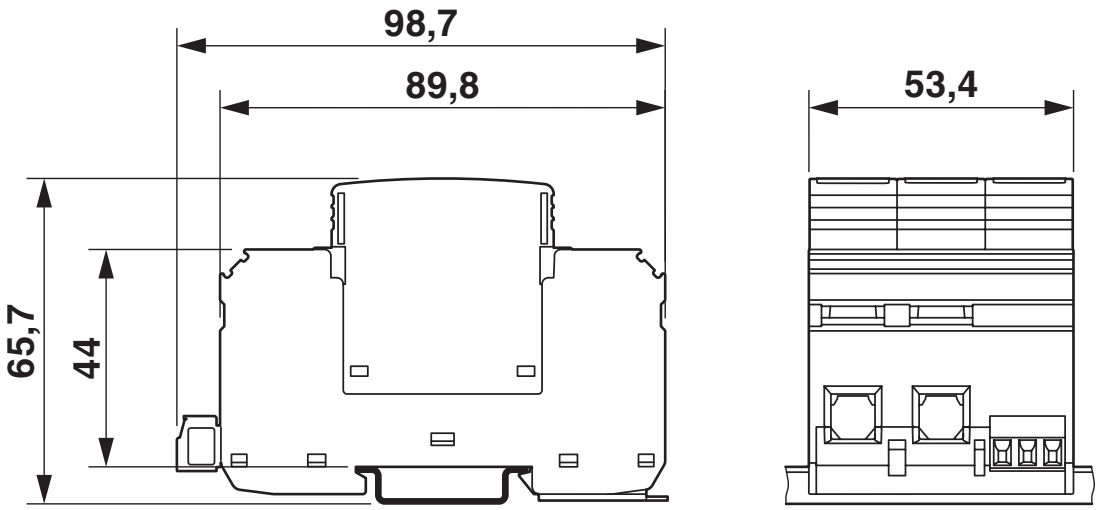

Approvals

To download certificates, visit the product detail page: https://www.phoenixcontact.com/us/products/2910352

UL Listed
Approval ID: FILE E 330181

cUL Listed
Approval ID: FILE E 330181

cULus Listed

Classifications

ECLASS

ECLASS-11.0	27130805
ECLASS-13.0	27171202

ETIM

ETIM 9.0	EC000941

UNSPSC

UNSPSC 21.0	39121600

Environmental product compliance

EU RoHS

Fulfills EU RoHS substance requirements	Yes, No exemptions

China RoHS

Environment friendly use period (EFUP)	EFUP-E
	No hazardous substances above the limits

EU REACH SVHC

REACH candidate substance (CAS No.)	No substance above 0.1 wt%

Accessories

MPB F600X16/ 1GS - Wiring bridge

2818355

https://www.phoenixcontact.com/us/products/2818355



Wiring bridge flexible, diameter: 16 mm^2, with a fork-type cable lug on one side, length: 600 mm

MPB F200X16/ 1GS - Wiring bridge

2818339

https://www.phoenixcontact.com/us/products/2818339



Wiring bridge flexible, diameter 16 mm^2, with a fork-type cable lug on one side, length: 200 mm

MPB 18/1-10/1.0.0 - Wiring bridge

2830443

https://www.phoenixcontact.com/us/products/2830443



Wiring bridge for modules with connecting pitch 17.5 mm, 1-phase, 10 pitches with contact sequence 1-0-0

MPB 18/4-12 - Wiring bridge

2809296

https://www.phoenixcontact.com/us/products/2809296

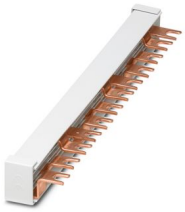

Wiring bridge for modules with connecting pitch 17.5 mm, 4-phase, 12-pos.

MPB 18/4- 8 - Wiring bridge

2809283

https://www.phoenixcontact.com/us/products/2809283

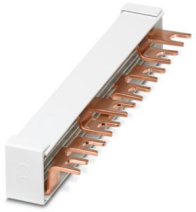

Wiring bridge for modules with connecting pitch 17.5 mm, 4-phase, 8-pos.

MPB 18/3- 6 - Wiring bridge

2809241

https://www.phoenixcontact.com/us/products/2809241

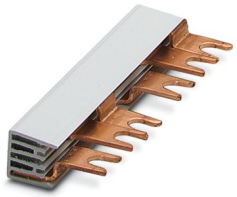

Wiring bridge for modules with connecting pitch 17.5 mm, 3-phase, 6-pos.

MPB 18/1-57 - Wiring bridge

2809238

https://www.phoenixcontact.com/us/products/2809238



Wiring bridge for modules with connecting pitch 17.5 mm, 1-phase, 57-pos.

MPB 18/1-12 - Wiring bridge

2748593

https://www.phoenixcontact.com/us/products/2748593



Wiring bridge for modules with connecting pitch 17.5 mm, 1-phase, 12-pos.

MPB 18/1- 9 - Wiring bridge

2748580

https://www.phoenixcontact.com/us/products/2748580



Wiring bridge for modules with connecting pitch 17.5 mm, 1-phase, 9-pos.

MPB 18/1- 8 - Wiring bridge

2748577

https://www.phoenixcontact.com/us/products/2748577



Wiring bridge for modules with connecting pitch 17.5 mm, 1-phase, 8-pos.

MPB 18/1- 6 - Wiring bridge

2748564

https://www.phoenixcontact.com/us/products/2748564



Wiring bridge for modules with connecting pitch 17.5 mm, 1-phase, 6-pos.

MPB 18/1- 4 - Wiring bridge

2809225

https://www.phoenixcontact.com/us/products/2809225



Wiring bridge for modules with connecting pitch 17.5 mm, 1-phase, 4-pos.

MPB 18/1- 3 - Wiring bridge

2809212

https://www.phoenixcontact.com/us/products/2809212



Wiring bridge for modules with connecting pitch 17.5 mm, 1-phase, 3-pos.

MPB 18/1- 2 - Wiring bridge

2809209

https://www.phoenixcontact.com/us/products/2809209



Wiring bridge for modules with connecting pitch 17.5 mm, 1-phase, 2-pos.

ZBN 18,LGS:ERDE - Marker for terminal blocks

2749589

https://www.phoenixcontact.com/us/products/2749589



Marker for terminal blocks, Strip, white, labeled, horizontal: Grounding symbol, mounting type: snapped, for terminal block width: 18 mm, lettering field size: 18 x 5 mm, Number of individual labels: 5

ZBN 18,LGS:L1-N,ERDE - Marker for terminal blocks

2749576

https://www.phoenixcontact.com/us/products/2749576



Marker for terminal blocks, Strip, white, labeled, horizontal: L1, L2, L3, N, GND, mounting type: snapped, for terminal block width: 18 mm, lettering field size: 18 x 5 mm, Number of individual labels: 5

ZBN 18:UNBEDRUCKT - Zack marker strip

2809128

https://www.phoenixcontact.com/us/products/2809128



Zack marker strip, Strip, white, unlabeled, can be labeled with: CMS-P1-PLOTTER, PLOTMARK, mounting type: snapped, for terminal block width: 18 mm, lettering field size: 18 x 5 mm, Number of individual labels: 5

DK-BIC-35 - Feed-through terminal block

2749880

https://www.phoenixcontact.com/us/products/2749880



Feed-through terminal block for VAL and FLT applications

B-STIFT - Marker pen

1051993

https://www.phoenixcontact.com/us/products/1051993



Marker pen, for manual labeling of unprinted Zack strips, smear-proof and waterproof, line thickness 0.5 mm

SZK PZ2 VDE - Screwdriver

1206463

https://www.phoenixcontact.com/us/products/1206463



Screwdriver, PZ crosshead, VDE insulated, size: PZ 2 x 100 mm, 2-component grip, with non-slip grip

VAL-US-120/40/2+1-FM - Type 1 surge protection device

2910352

https://www.phoenixcontact.com/us/products/2910352

VAL-US-120/40-P - Type 1 surge protection plug

2910335

https://www.phoenixcontact.com/us/products/2910335



UL Recognized type 1 SPD and IEC type 2 surge protection plug with a varistor and thermal disconnect for use with VAL-US base elements, mechanical and visual fault warning

GDT-US-NG/40-P - Type 1 surge protection plug

2910342

https://www.phoenixcontact.com/us/products/2910342



UL Recognized type 1 SPD and IEC type 2 surge protection plug with a gas discharge tube and thermal disconnect for use with VAL-US base elements, mechanical and visual fault warning

Phoenix Contact 2024 © - all rights reserved
https://www.phoenixcontact.com

Phoenix Contact USA
586 Fulling Mill Road
Middletown, PA 17057, United States
(+717) 944-1300
info@phoenixcon.com