Data sheet | Item number: 2091-1525/020-000

1-conductor male connector; Push-in CAGE CLAMP®; 1.5 mm²; Pin spacing 3.5 mm; 5-pole; DIN-35 rail/panel mounting; Snap-in mounting feet; Integrated release lever; 1,50 mm²; light gray

www.wago.com/2091-1525/020-000

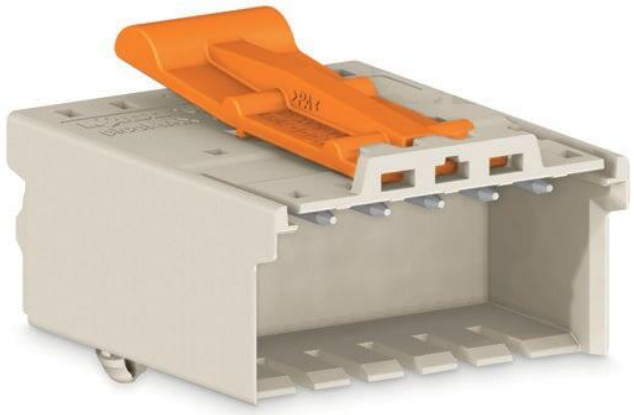

Picture differs from the item.

Color:

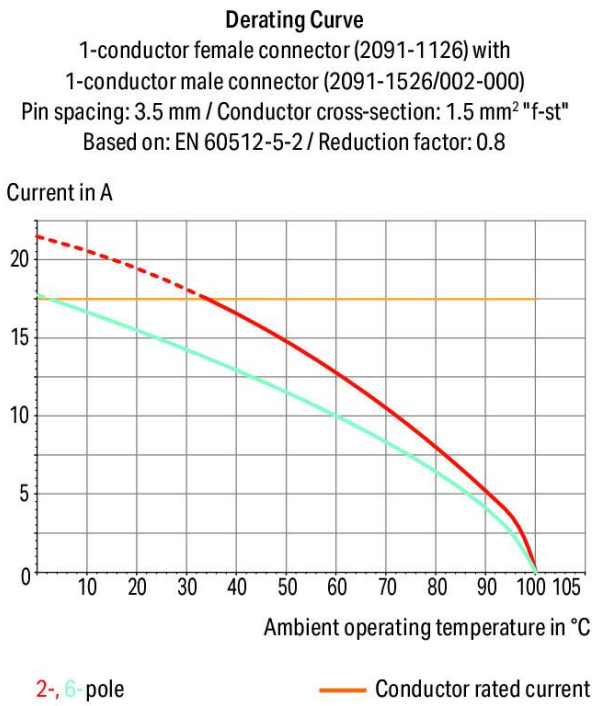

Subject to changes. Please also observe the further product documentation!

WAGO GmbH & Co. KG
Hansastr. 27
32423 Minden
Phone: +49571 887-0 | Fax: +49571 887-169
Email: info.de@wago.com | Web: www.wago.com

Do you have any questions about our products?
We are always happy to take your call at +49 (571) 887-44222.

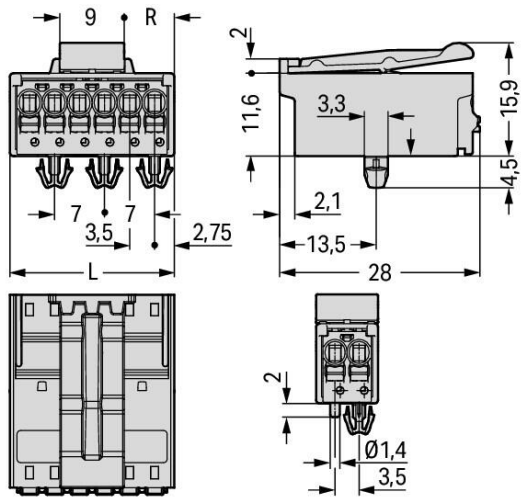

Dimensions in mm
L = (pole no. x pin spacing) + 2 mm
Even pole number R = (L – 9 mm) : 2
Odd pole number R = (L – 12.5 mm) : 2

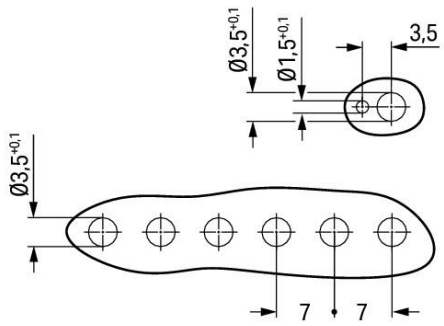

Item description

- Universal connection for all conductor types
- Simple, push-in termination of solid and ferruled conductors
- Easy-to-use design does not require special tools
- Testing parallel to conductor entry – tip contact
- For “wire-to-wire” and “board-to-wire” connections
- Integrated release lever

Data
Notes

Safety information	The **picoMAX® Pluggable Connection System** includes connectors without breaking capacity in accordance with DIN EN 61984. When used as intended, these connectors must not be connected /disconnected when live or under load. The circuit design should ensure header pins, which can be touched, are not live when unmated.
Variants:	Direct marking Other versions (or variants) can be requested from WAGO Sales or configured at https://configurator.wago.com/.

Electrical data

Subject to changes. Please also observe the further product documentation!

WAGO GmbH & Co. KG
Hansastr. 27
32423 Minden
Phone: +49571 887-0 | Fax: +49571 887-169
Email: info.de@wago.com | Web: www.wago.com

Do you have any questions about our products?
We are always happy to take your call at +49 (571) 887-44222.

Ratings per IEC/EN

Ratings per	IEC/EN 60664-1
Nominal voltage (III/3)	160 V
Rated impulse voltage (III/3)	2.5 kV
Rated voltage (III/2)	160 V
Rated impulse voltage (III/2)	2.5 kV
Nominal voltage (II/2)	320 V
Rated surge voltage (II/2)	2.5 kV
Rated current	10 A
Legend (ratings)	(III / 2) ≙ Overvoltage category III / Pollution degree 2

Ratings per UL

Approvals per	UL 1059
Rated voltage UL (Use Group B)	300 V
Rated current UL (Use Group B)	10 A
Rated voltage UL (Use Group D)	300 V
Rated current UL (Use Group D)	10 A

Connection data

Connection points	5
Total number of potentials	5
Number of connection types	1
Number of levels	1

Connection 1

Connection technology	Push-in CAGE CLAMP®
Actuation type	Push-button
Actuation direction 1	Operation parallel to conductor entry
Solid conductor	0.2 … 1.5 mm² / 24 … 14 AWG
Fine-stranded conductor	0.2 … 1.5 mm² / 24 … 14 AWG
Fine-stranded conductor; with insulated ferrule	0.25 … 0.75 mm²
Fine-stranded conductor; with uninsulated ferrule	0.25 … 1.5 mm²
Strip length	8 … 9 mm / 0.31 … 0.35 inches
Pole number	5

Subject to changes. Please also observe the further product documentation!

WAGO GmbH & Co. KG
Hansastr. 27
32423 Minden
Phone: +49571 887-0 | Fax: +49571 887-169
Email: info.de@wago.com | Web: www.wago.com

Do you have any questions about our products?
We are always happy to take your call at +49 (571) 887-44222.

Physical data

Pin spacing	3.5 mm / 0.138 inches
Width	19.5 mm / 0.768 inches
Height	20.4 mm / 0.803 inches
Height from the surface	15.9 mm
Depth	28 mm / 1.102 inches

Mechanical data

Variable coding	Yes
Housing sheet thickness	0.6 … 1.2 mm / 0.024 … 0.047 inches
Mounting type	Snap-in foot
Anti-rotation protection	Yes

Plug-in connection

Contact type (pluggable connector)	Male connector/plug
Connector (connection type)	for conductor
Mismating protection	No
Plugging without loss of pin spacing	Yes
Locking of plug-in connection	Locking latch

Material data

Note (material data)	Information on material specifications can be found here
Color	light gray
Material group	I
Insulation material	Polyphthalamide (PPA GF)
Flammability class per UL94	V0
Clamping spring material	Chrome-nickel spring steel (CrNi)
Contact material	Electrolytic copper (E_{Cu})
Contact plating	Tin
Fire load	0.021 MJ
Weight	5.3 g

Environmental requirements

Limit temperature range	-60 … +100 °C

Subject to changes. Please also observe the further product documentation!

WAGO GmbH & Co. KG
Hansastr. 27
32423 Minden
Phone: +49571 887-0 | Fax: +49571 887-169
Email: info.de@wago.com | Web: www.wago.com

Do you have any questions about our products?
We are always happy to take your call at +49 (571) 887-44222.

Processing temperature	-35 … +60 °C

Commercial data

eCl@ss 10.0	27-14-11-06
eCl@ss 9.0	27-14-11-06
ETIM 8.0	EC001284
ETIM 7.0	EC001284
ECCN	NO DATA
PU (SPU)	100 pcs
Packaging type	box
Country of origin	DE
GTIN	4055143543491
Customs tariff number	85366930000

Environmental Product Compliance

RoHS Compliance Status	Compliant,No Exemption

Approvals / Certificates

General approvals

Logo	Approval	Additional Approval Text	Certificate name
	CB DEKRA Certification B.V.	IEC 61984	NL-49736 /A1
	CSA DEKRA Certification B.V.	C22.2 No. 158	2362521
	CSA DEKRA Certification B.V.	C22.2	2362521
	KEMA/KEUR DEKRA Certification B.V.	EN 61984	71-102260 REV.1
	UL Underwriters Laboratories Inc.	UL 1977	E45171

Subject to changes. Please also observe the further product documentation!

WAGO GmbH & Co. KG
Hansastr. 27
32423 Minden
Phone: +49571 887-0 | Fax: +49571 887-169
Email: info.de@wago.com | Web: www.wago.com

Do you have any questions about our products?
We are always happy to take your call at +49 (571) 887-44222.

Counterpart

	Item no.2091-1125 1-conductor female connector; push-button; Push-in CAGE CLAMP®; 1.5 mm²; Pin spacing 3.5 mm; 5-pole; 1,50 mm²; light gray	www.wago.com/2091-1125

Optional accessories

Coding

Coding

	Item no.: 2091-1610 Coding key carrier; suitable for 3.5 mm pin spacing; orange	www.wago.com/2091-1610

Downloads

Documentation

Additional Information

Technical Section Technical explanations	2019 年4月3日	pdf 2.1 MB	Download

CAD/CAE-Data

CAD data

2D/3D Models 2091-1525/020-000	URL	Download

CAE data

ZUKEN Portal 2091-1525/020-000	URL	Download

Asset Administration Shell

Asset Administration Shell 2091-1525/020-000	URL	Download

Environmental Product Compliance

Compliance Search

Environmental Product Compliance 2091-1525/020-000 1-conductor male connector; Push-in CAGE CLAMP®; 1.5 mm²; Pin spacing 3.5 mm; 5-pole; DIN-35 rail/panel mounting; Snap-in mounting feet; Integrated release lever; 1,50 mm²; light gray	URL	Download

Subject to changes. Please also observe the further product documentation!

WAGO GmbH & Co. KG
Hansastr. 27
32423 Minden
Phone: +49571 887-0 | Fax: +49571 887-169
Email: info.de@wago.com | Web: www.wago.com

Do you have any questions about our products?
We are always happy to take your call at +49 (571) 887-44222.

Installation Notes

Subject to changes. Please also observe the further product documentation!

WAGO GmbH & Co. KG
Hansastr. 27
32423 Minden
Phone: +49571 887-0 | Fax: +49571 887-169
Email: info.de@wago.com | Web: www.wago.com

Do you have any questions about our products?
We are always happy to take your call at +49 (571) 887-44222.