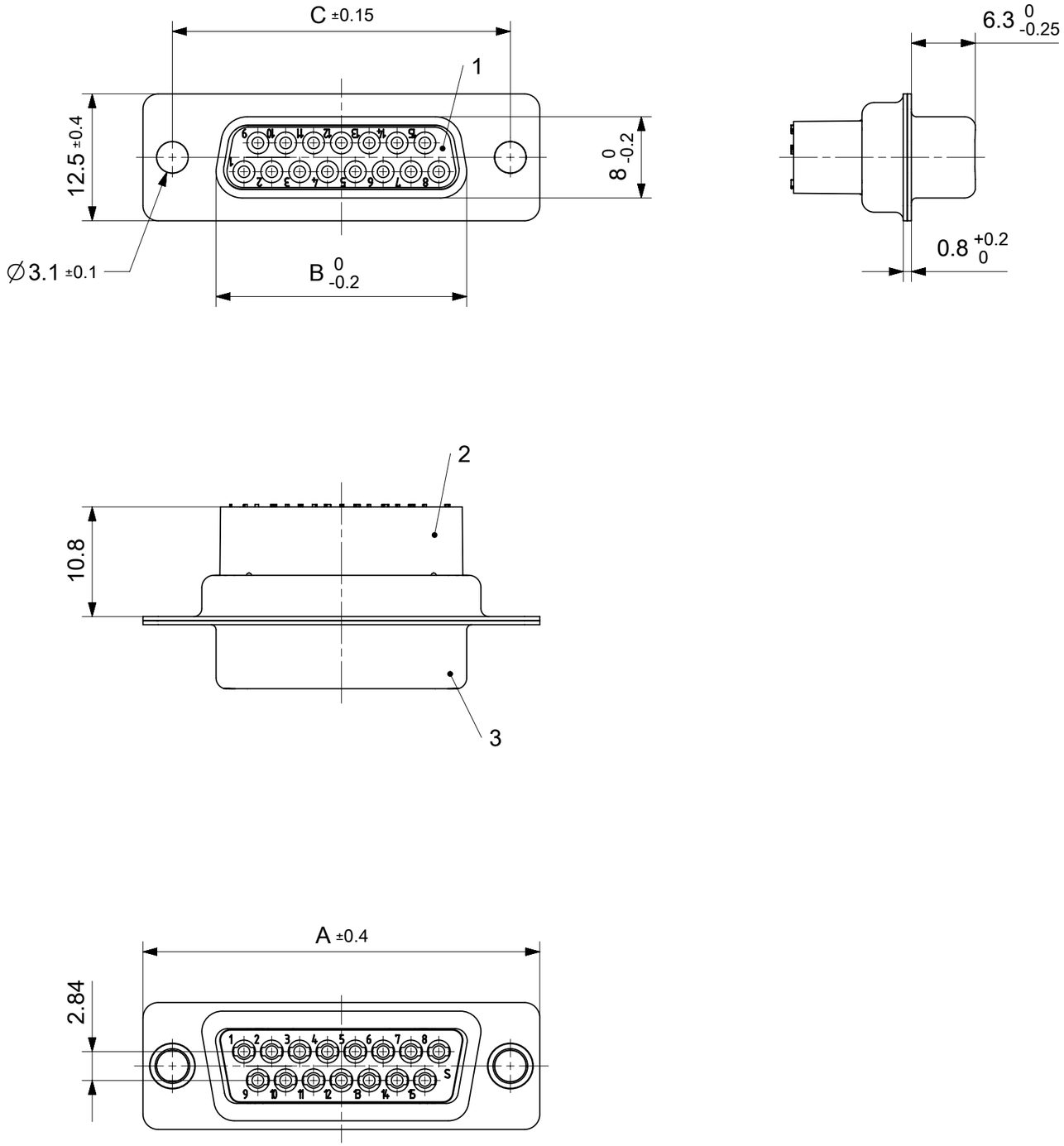

FCT Part number:

Fy*1)xx*2)S7-K121

e.g. FL15S7-K121

*1) y for series FL or FU

*2) xx No. of contacts 09, 15, 25 or 37

Material Number	y*1)	xx*2)	A[mm]	B[mm]	C[mm]
1727040010	L	09	30.8	16.4	25
1731090303	U				
1727040002	L	15	39.1	24.7	33.3
1731090446	U				
1727040004	L	25	53	38.5	47.04
1731090294	U				
1727040006	L	37	69.3	54.9	63.5
1731090429	U				

Technical data for modification (FU)

RoHS compliant by exemption

Crimp contacts FK20S (AWG 20-24/1.3µm Au) included in delivery

No.	Pc.	Part	Type Description/Material	Surface plating/Color/Class
3	1	Shell	Steel	tin plated
2	1	Insulator rear part	PEI (-55°C to +130°C)	green
1	1	Insulator front part	PBT acc. UL94V-0	green

Technical data for modification (FL)

RoHS compliant

Crimp contacts not supplied with connector. Contacts must be ordered separately.

No.	Pc.	Part	Type Description/Material	Surface plating/Color/Class
3	1	Shell	Steel	tin plated
2	1	Insulator rear part	PA (-55°C to +115°C)	black
1	1	Insulator front part	PBT acc. UL94V-0	black

MEASUREMENTS WITHOUT TOLERANCE ACC TO ISO 2768-m

REPLACEMENT FOR DOCUMENT NUMBER: FyxxS7-K121

FUNCTIONAL SYMBOLS: FA = 0, FC = 0, FP = 0

DIVISIONAL SYMBOLS

THIS DRAWING CONTAINS INFORMATION THAT IS PROPRIETARY TO MOLEX ELECTRONIC TECHNOLOGIES, LLC AND SHOULD NOT BE USED WITHOUT WRITTEN PERMISSION

DIMENSION UNITS: mm — SCALE: 2:1

GENERAL TOLERANCES (UNLESS SPECIFIED)

ANGULAR TOL	±	°
4 PLACES	±	
3 PLACES	±	
2 PLACES	±	
1 PLACE	±	
0 PLACES	±	

DRAFT WHERE APPLICABLE MUST REMAIN WITHIN DIMENSIONS

CURRENT REV DESC:

EC NO: 717924

DRWN: SKANDB 2022/04/06

CHK'D: MTEUBEL 2022/08/18

APPR: MTEUBEL 2022/08/18

INITIAL REVISION:

DRWN: SKANDB 2022/04/06

APPR: MTEUBEL 2022/08/18

FIRST ANGLE PROJECTION

DRAWING: A3-SIZE

SERIES: 172704

molex

FCT D-SUB CRIMP CONNECTOR

PRODUCT CUSTOMER DRAWING

DOCUMENT NUMBER	DOC TYPE	DOC PART	REVISION
1727040010	PSD	000	A

MATERIAL NUMBER	CUSTOMER	SHEET NUMBER
SEE TABLE	GENERAL MARKET	1 OF 1

DOCUMENT STATUS	P1	RELEASE DATE	2022/08/18 07:46:16

FORMAT: master-Board-A3
REVISION: J1
DATE: 2021/05/05