Data sheet



SKM36-HVV0-K02

SKS/SKM36

MOTOR FEEDBACK SYSTEMS

SICK
Sensor Intelligence.

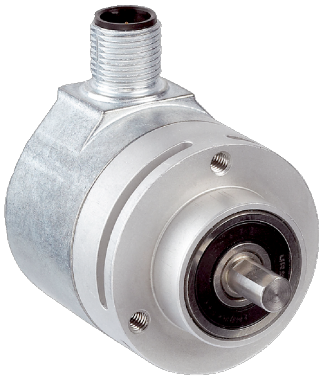

Illustration may differ

Ordering information

Type	part no.
SKM36-HVV0-K02	1035602

Other models and accessories ➜ www.sick.com/SKS_SKM36

Detailed technical data

Safety-related parameters

$MTTF_D$ (mean time to dangerous failure)	205 years (EN ISO 13849) [1]

[1] This product is a standard product and does not constitute a safety component as defined in the Machinery Directive. Calculation based on nominal load of components, average ambient temperature 60 °C, frequency of use 8760 h/a. All electronic failures are considered hazardous. For more information, see document no. 8015532.

Performance

Sine/cosine periods per revolution	128
Number of the absolute ascertainable revolutions	4,096
Total number of steps	16,777,216
Measuring step	2.5 ″ For interpolation of the sine/cosine signals with, e. g., 12 bits
Integral non-linearity	± 120 ″, Error limits for evaluating sine/cosine period
Differential non-linearity	Non-linearity within a sine/cosine period
Operating speed	≤ 6,000 min^{-1}, up to which the absolute position can be reliably produced
Available memory area	1,792 Byte
System accuracy	± 120 ″

Interfaces

Type of code for the absolute value	Binary
Code sequence	Increasing, when turning the shaft For clockwise rotation, looking in direction “A” (see dimensional drawing), For clockwise shaft rotation, looking in direction “A” (see dimensional drawing)
Communication interface	HIPERFACE®

Electronics

Connection type	Cable, 8-wire, 1.5 m

[1] Without load.

Supply voltage	7 V DC ... 12 V DC
Recommended supply voltage	8 V DC
Current consumption	60 mA [1]
Output frequency for sine/cosine signals	≤ 65 kHz

[1] Without load.

Mechanics

Shaft version	Solid shaft
Flange type / stator coupling	Servo-/face mount flange, stator coupling
Dimensions	See dimensional drawing
Weight	≤ 0.07 kg
Moment of inertia of the rotor	6 gcm²
Operating speed	9,000 min⁻¹, 9,000 U/min
Angular acceleration	≤ 500,000 rad/s²
Operating torque	0.6 Ncm
Start up torque	+ 0.9 Ncm
Permissible shaft loading	10 N (radial) 5 N (axial)
Life of ball bearings	2.0 x 10^9 revolutions

Ambient data

Operating temperature range	–20 °C ... +100 °C
Storage temperature range	–40 °C ... +125 °C, without package
Relative humidity/condensation	90 %, Condensation not permitted
Resistance to shocks	100 g, 6 ms, 6 ms (according to EN 60068-2-27)
Frequency range of resistance to vibrations	50 g, 10 Hz ... 2,000 Hz (EN 60068-2-6)
EMC	According to EN 61000-6-2 and EN 61000-6-3
Enclosure rating	IP50, with mating plug inserted (IEC 60529)

Certificates

EU declaration of conformity	✓
UK declaration of conformity	✓
ACMA declaration of conformity	✓
Moroccan declaration of conformity	✓
China-RoHS	✓
cULus certificate	✓
Information according to Art. 3 of Data Act (Regulation EU 2023/2854)	✓

Classifications

ECLASS 5.0	27270590
ECLASS 5.1.4	27270590
ECLASS 6.0	27270590
ECLASS 6.2	27270590

ECLASS 7.0	27270590
ECLASS 8.0	27270590
ECLASS 8.1	27270590
ECLASS 9.0	27270590
ECLASS 10.0	27273805
ECLASS 11.0	27273901
ECLASS 12.0	27273901
ETIM 5.0	EC001486
ETIM 6.0	EC001486
ETIM 7.0	EC001486
ETIM 8.0	EC001486
UNSPSC 16.0901	41112113

Dimensional drawing General tolerances according to DIN ISO 2768-mk

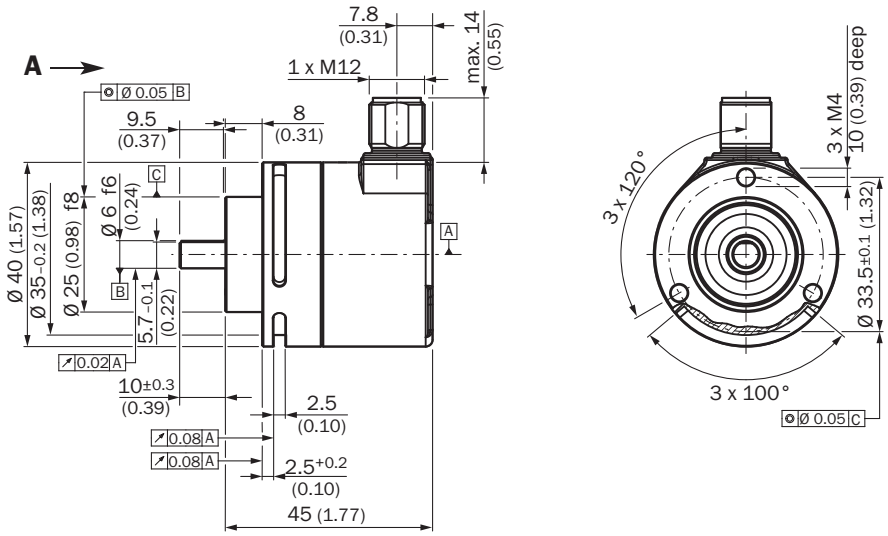

Dimensions in mm (inch)

PIN assignment

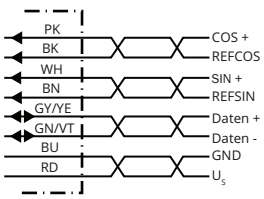

Wire colors (cable connection)	Signal	Explanation
Brown	REFSIN	Process data channel
White	+ SIN	Process data channel
Black	REFCOS	Process data channel

Wire colors (cable connection)	Signal	Explanation
Pink	+ COS	Process data channel
Gray or yellow	Data +	Parameter channel RS 485
Green or purple	Data -	Parameter channel RS 485
Blue	GND	Ground connection
Red	U_S	Supply voltage
Screen	–	Screen connected to encoder housing

Diagrams Signal diagram for clockwise shaft rotation, looking in direction “A” (see dimensional drawing) 1 period = 360° : 128

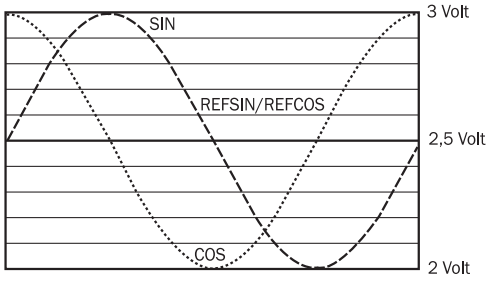

Operation note Charactersitics applicable to all permissible environmental conditions

Signal	Values/unit
Signal peak, peak V_{SS} of SIN, COS	0.8 V ... 1.1 V
Signal offset REFSIN, REFCOS	2.2 V ... 2.8 V

Operation note Model-specific settings

Type-specific settings	SKS	SKM
Model ID (command 52h)	32h	27h
Free E^2PROM [bytes]	1792	1792
Address	40h	40h
Mode_485	E4h	E4h
Codes 0 to 3	55h	55h
Counter	0	0

Operation note Overview of status messages for HIPERFACE®

	Status code	Description	SKS	SKM
Error type	00h	The encoder has not detected any faults	■	■
Initialization	01h	Incorrect alignment data	■	■
	02h	Incorrect internal angular offset	■	■
	03h	Data field partitioning table destroyed	■	■
	04h	Analog limit values not available	■	■
	05h	Internal I2C bus inoperative	■	■
	06h	Internal checksum error	■	■
Protocol	07h	Encoder reset occurred as a result of program monitoring	■	■
	09h	Parity error	■	■
	0Ah	Checksum of transmitted data is incorrect	■	■
	0Bh	Unknown command code	■	■
	0Ch	Number of transmitted data is incorrect	■	■
	0Dh	Transmitted command argument is not allowed	■	■
Data	0Eh	The selected data field may not be written to	■	■
	0Fh	Incorrect access code	■	■
	10h	Size of specified data field cannot be changed	■	■
	11h	Specified word address lies outside the data field	■	■
	12h	Access to non-existent data field	■	■
Position	01h	Analog signals outside specification		
	1Fh	Speed too high, no position formation possible		
	20h	Singleturn position unreliable	■	■
	21h	Multiturn position error		■
	22h	Multiturn position error		■
	23h	Multiturn position error		■
Other	1Ch	Value monitoring of the analog signals (process data)		
	1Dh	Transmitter current critical or P2RAM-Error	■	■
	1Eh	Encoder temperature critical	■	■
	08h	Counter overflow	■	■
For more information on the interface see HIPERFACE® - description, part no. 8010701				

Operation note Overview of supported commands for HIPERFACE®

Overview of supported commands			SKS	SKM
Command byte	**Function**	**Code 0** [1]	**Comments**	**Comments**
42h	Read position		12 bits	24 bits
43h	Set position	■		
44h	Read analog value		Channel number F0H 48h	Channel number F0H 48h
			Temperature [°C]	Temperature [°C]
46h	Read counter			
47h	Increment Counter			
49h	Delete counter	■		
4Ah	Read data			
4Bh	Store data			
4Ch	Determine status of a data field			
4Dh	Create data field			
4Eh	Determine available memory area			
4Fh	Change access code			
50h	Read encoder status			
52h	Read out type label		Encoder type = 32h	Encoder type = 37h
53h	Encoder reset			
55h	Allocate encoder address	■		
56h	Read serial number and program version			
57h	Configure serial interface	■		
6AH	Set position with synchronization to process data channel			

[1] The commands thus marked include the parameter "Code 0". Code 0 is a byte inserted into the protocol to provide additional protection of vital system parameters against accidental overwriting. When the device is supplied, "Code 0" = 55h.

Recommended accessories

Other models and accessories ➜ www.sick.com/SKS_SKM36

	Brief description	Type	part no.
programming devices			
	• **Product segment:** Programming devices • **Product family:** PGT-11-S • **Description:** SVip® LAN programming tool for all motor feedback systems • **Items supplied:** 1x programming tool PGT-11-S LAN, 1x power supply unit 100-240 V AC / 12 V DC, primary adapter (Europe, UK, USA/Japan, Australia), Ethernet cable 3 m	PGT-11-S LAN	1057324

	Brief description	Type	part no.
Mounting systems			
	• **Description:** Flange adapter, adaption of 25 mm spigot face mount flange to 50 mm servo flange • **Material:** Aluminum • **Details:** Aluminum	BEF-FA-025-050	2032622
	• **Description:** Flange adapter, adaption of 25 mm spigot face mount flange to 60s face mount flange with 36 mm centering collar • **Material:** Aluminum • **Details:** Aluminum	BEF-FA-025-036	2034226
	• **Description:** Flange adapter, adaption of 25 mm spigot face mount flange to 60 mm square installation plate • **Material:** Aluminum • **Details:** Aluminum	BEF-FA-025-060RCA	2032623
	• **Description:** Flange adapter, adaption of 25 mm spigot face mount flange to 60 mm square installation plate with shock-absorber • **Material:** Aluminum • **Details:** Aluminum	BEF-FA-025-060RSA	2032624
	• **Description:** Mounting brackets for encoders with a centering spigot 25 mm • **Items supplied:** Mounting kit for face mount flange included	BEF-WF-25	2032621
	• **Description:** Flange adapter, adapts SKS/SKM36 servo/face mount flange encoder with 25 mm centering collar to 63 mm square mounting plate • **Material:** Aluminum • **Details:** Aluminum	BEF-FA025063RECSK	2083562
	• **Description:** Flange adapter, adapts SKS/SKM36 face mount flange encoder with 25 mm centering collar to 60 mm square mounting plate with shock absorbers • **Material:** Aluminum • **Details:** Aluminum	BEF-FA025060RSASK	2083561
	• **Description:** Flange adapter, adapts SKS/SKM36 servo/face mount flange encoder with 25 mm centering collar to 60 mm square mounting plate • **Material:** Aluminum • **Details:** Aluminum	BEF-FA025060R-CASK	2083560
	• **Description:** Flange adapter, adapts SKS/SKM36 face mount flange encoder with 25 mm centering collar to 50 mm servo flange • **Material:** Aluminum • **Details:** Aluminum	BEF-FA-025-050-SK	2083559

SICK AT A GLANCE

SICK is one of the leading manufacturers of intelligent sensors and sensor solutions for industrial applications. A unique range of products and services creates the perfect basis for controlling processes securely and efficiently, protecting individuals from accidents and preventing damage to the environment.

We have extensive experience in a wide range of industries and understand their processes and requirements. With intelligent sensors, we can deliver exactly what our customers need. In application centers in Europe, Asia and North America, system solutions are tested and optimized in accordance with customer specifications. All this makes us a reliable supplier and development partner.

Comprehensive services complete our offering: SICK LifeTime Services provide support throughout the machine life cycle and ensure safety and productivity.

For us, that is “Sensor Intelligence.”

WORLDWIDE PRESENCE:

Contacts and other locations –www.sick.com