ME-IO 18,8 B/FE 7/9U TBUS 7035 - Mounting base housing

2201961

https://www.phoenixcontact.com/us/products/2201961

Please be informed that the data shown in this PDF document is generated from our online catalog. Please find the complete data in the user documentation. Our general terms of use for downloads are valid.



DIN rail housing, Lower housing part, with metal foot catch, with functional ground contact, with 7U Lock and Release system, with vents, width: 18.9 mm, height: 109.6 mm, depth: 64.3 mm, cross connection: DIN rail connector (optional), number of positions cross connector: 5

Your advantages

- Easy, tool-free mounting
- Optional DIN rail connector for easy module-to-module communication
- Lock and Release principle for automatic latching and intuitive release of the front connection plug
- Plastic in accordance with UL94 V0: for more rigorous flammability requirements
- Integrated FE contact for simple electromagnetically compatible installation

Commercial data

Item number	2201961
Packing unit	1 pc
Note	Made to order (non-returnable)
Sales key	AC15
Product key	ACHEBA
Catalog page	Page 34 (NTK-2014)
GTIN	4046356946445
Weight per piece (including packing)	36.45 g
Weight per piece (excluding packing)	22.22 g
Customs tariff number	85389099
Country of origin	DE

Technical data

Notes

General	Refer to the data sheet for the range in the download area.
General	Material of contact pads for bus connector, galvanic gold (hard gold)

Product properties

Max. number of positions	28 (pitch: 5 mm)
	42 (pitch: 3.45 mm)
Type	Lower housing part, with metal foot catch, with functional ground contact, with 7U Lock and Release system
Housing type	DIN rail housing
Ventilation openings present	yes

Dimensions

Dimensional drawing	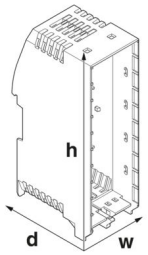
Width	18.9 mm
Height	109.6 mm
Depth	64.3 mm
Depth from top edge of DIN rail	57.7 mm

Material specifications

Color	light grey (7035)
Flammability rating according to UL 94	V0
Housing material	Polyamide

Environmental and real-life conditions

Ambient conditions

Max. IP code to attain	IP20
Ambient temperature (operation)	-40 °C ... 105 °C (depending on power dissipation)
Ambient temperature (storage/transport)	-40 °C ... 55 °C
Ambient temperature (assembly)	-5 °C ... 100 °C
Relative humidity (storage/transport)	80 %

PCB data

Number of PCB holders	1

Type of PCB mount	Latching

Mounting

Mounting type	DIN rail mounting
Mounting position	Vertical (horizontal DIN rail)

Packaging specifications

Type of packaging	packed in cardboard
Outer packaging type	Carton

Drawings

Dimensional drawing

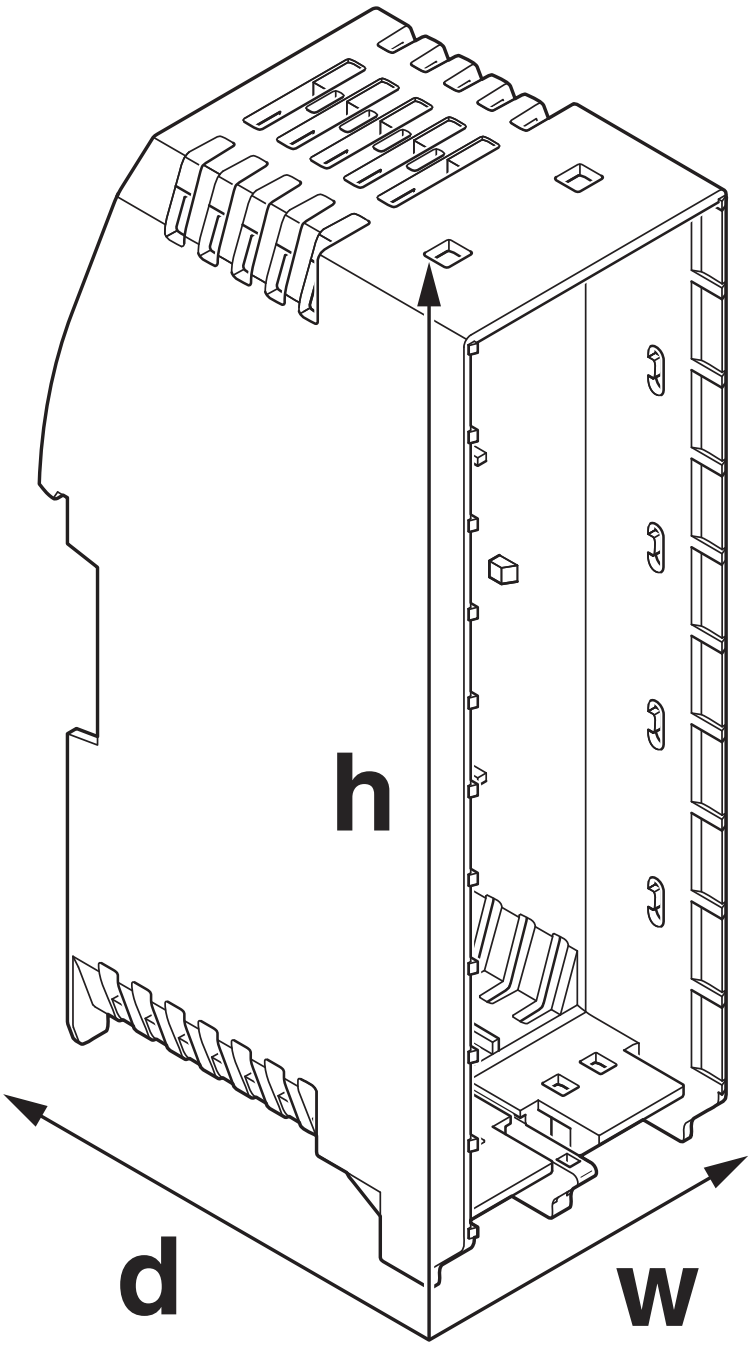

Schematic figure for illustrating the item dimensions. The figure is not of the desired product. For further details, refer to the product drawings in the “Downloads” tab.

Dimensional drawing

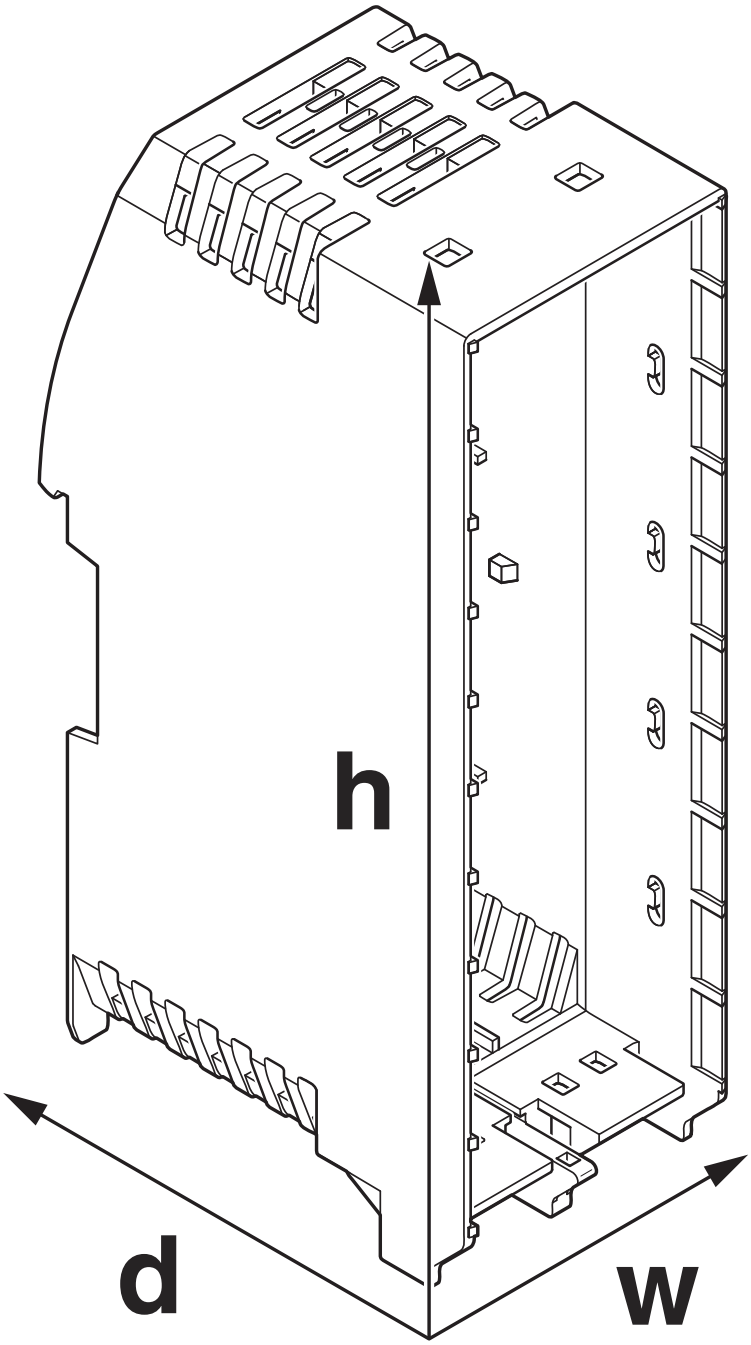

Approvals

To download certificates, visit the product detail page: https://www.phoenixcontact.com/us/products/2201961

UL Recognized
Approval ID: FILE E 240868

Classifications

ECLASS

ECLASS-11.0	27182702

UNSPSC

UNSPSC 21.0	31261501

Environmental product compliance

EU RoHS

Fulfills EU RoHS substance requirements	Yes, No exemptions

China RoHS

Environment friendly use period (EFUP)	EFUP-E
	No hazardous substances above the limits

EU REACH SVHC

REACH candidate substance (CAS No.)	No substance above 0.1 wt%

Mandatory accessories

HSCH 2,5-3U/12 9005 - PCB header

2201788

https://www.phoenixcontact.com/us/products/2201788

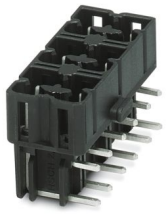

PCB headers, nominal cross section: 2.5 mm^2, color: black, nominal current: 8 A, rated voltage (III/2): 320 V, contact surface: Tin, contact connection type: Pin, number of potentials: 12, number of rows: 2, number of positions: 12, number of connections: 12, product range: HSCH 2,5/..-G, pitch: 5 mm, mounting: Wave soldering, pin layout: Linear pinning, solder pin [P]: 3.8 mm, number of solder pins per potential: 1, plug-in system: HSC 2,5, Pin connector pattern alignment: Standard, locking: without, mounting: without, type of packaging: packed in cardboard

HSCH 2,5-2U/ 8 9005 - PCB header

2201789

https://www.phoenixcontact.com/us/products/2201789



PCB headers, nominal cross section: 2.5 mm^2, color: black, nominal current: 8 A, rated voltage (III/2): 320 V, contact surface: Tin, contact connection type: Pin, number of potentials: 8, number of rows: 2, number of positions: 8, number of connections: 8, product range: HSCH 2,5/..-G, pitch: 5 mm, mounting: Wave soldering, pin layout: Linear pinning, solder pin [P]: 3.8 mm, number of solder pins per potential: 1, plug-in system: HSC 2,5, Pin connector pattern alignment: Standard, locking: without, mounting: without, type of packaging: packed in cardboard

HSCH 2,5-2U-TTTT 9005 - PCB header

2201790

https://www.phoenixcontact.com/us/products/2201790



PCB headers, nominal cross section: 2.5 mm^2, color: black, nominal current: 8 A, rated voltage (III/2): 320 V, contact surface: Tin, contact connection type: Pin, number of potentials: 4, number of rows: 2, number of positions: 4, number of connections: 4, product range: HSCH 2,5/..-G, pitch: 5 mm, mounting: Wave soldering, pin layout: Linear pinning, solder pin [P]: 3.8 mm, number of solder pins per potential: 1, plug-in system: HSC 2,5, Pin connector pattern alignment: Standard, locking: without, mounting: without, type of packaging: packed in cardboard, Partially assembled version

HSCH 2,5-2U-2220 9005 - PCB header

2201792

https://www.phoenixcontact.com/us/products/2201792



PCB headers, nominal cross section: 2.5 mm^2, color: black, nominal current: 8 A, rated voltage (III/2): 320 V, contact surface: Tin, contact connection type: Pin, number of potentials: 6, number of rows: 2, number of positions: 6, number of connections: 6, product range: HSCH 2,5/..-G, pitch: 5 mm, mounting: Wave soldering, pin layout: Mixed pinning, solder pin [P]: 3.8 mm, number of solder pins per potential: 1, plug-in system: HSC 2,5, Pin connector pattern alignment: Standard, locking: without, mounting: without, type of packaging: packed in cardboard, Partially assembled version

ME-IO 18,8 B/FE 7/9U TBUS 7035 - Mounting base housing

2201961

https://www.phoenixcontact.com/us/products/2201961

HSC-LR 5U KIT 2003 - Locking

2201796

https://www.phoenixcontact.com/us/products/2201796



DIN rail housing, 5U, Lock and Release system, width: 16.1 mm, height: 67.95 mm, depth: 8.8 mm, color: orange (similar RAL 2003)

HSC-LR 3U KIT 2003 - Locking

2201797

https://www.phoenixcontact.com/us/products/2201797



DIN rail housing, 3U, Lock and Release system, width: 16.1 mm, height: 45.95 mm, depth: 8.8 mm, color: orange (similar RAL 2003)

HSC-LR 7U KIT 2003 - Locking

2201795

https://www.phoenixcontact.com/us/products/2201795



DIN rail housing, 7U, Lock and Release system, width: 16.1 mm, height: 89.95 mm, depth: 8.8 mm, color: orange (similar RAL 2003)

HSC-LR 9U KIT 2003 - Locking

2201794

https://www.phoenixcontact.com/us/products/2201794



DIN rail housing, 9U, Lock and Release system, width: 16.1 mm, height: 111.8 mm, depth: 8.8 mm, color: orange (similar RAL 2003)

Accessories

ME-IO 18,8 B/FE 7/9U TBUS 7035 - Mounting base housing

2201961

https://www.phoenixcontact.com/us/products/2201961

ME-IO 18,8 C 5U 7035 - Housing cover

2201803

https://www.phoenixcontact.com/us/products/2201803

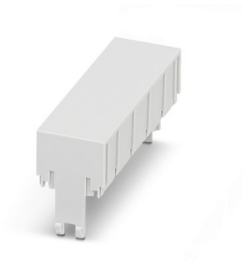

DIN rail housing, 5U, Housing cover, width: 18.9 mm, height: 54.8 mm, depth: 26 mm, color: light grey (similar RAL 7035)

ME-IO 18,8 C 7U 7035 - Housing cover

2201805

https://www.phoenixcontact.com/us/products/2201805



DIN rail housing, 7U, Housing cover, width: 18.9 mm, height: 76.8 mm, depth: 26 mm, color: light grey (similar RAL 7035)

ME-IO 18,8 B/FE 7/9U TBUS 7035 - Mounting base housing

2201961

https://www.phoenixcontact.com/us/products/2201961

ME-IO 18,8 C 3U S1 7035 - Housing cover

2201801

https://www.phoenixcontact.com/us/products/2201801



DIN rail housing, 3U, Housing cover, width: 18.9 mm, height: 32.8 mm, depth: 26 mm, color: light grey (similar RAL 7035)

ME-IO 18,8 C 4U 7035 - Housing cover

2201802

https://www.phoenixcontact.com/us/products/2201802

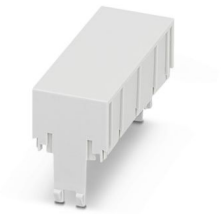

DIN rail housing, 4U, Housing cover, width: 18.9 mm, height: 43.8 mm, depth: 26 mm, color: light grey (similar RAL 7035)

ME-IO 18,8 B/FE 7/9U TBUS 7035 - Mounting base housing

2201961

https://www.phoenixcontact.com/us/products/2201961

ME-IO 18,8 C 6U 7035 - Housing cover

2201804

https://www.phoenixcontact.com/us/products/2201804



DIN rail housing, 6U, Housing cover, width: 18.9 mm, height: 65.8 mm, depth: 26 mm, color: light grey (similar RAL 7035)

ME-IO 18,8 C 2U 7035 - Housing cover

2201799

https://www.phoenixcontact.com/us/products/2201799



DIN rail housing, 2U, Housing cover, width: 18.9 mm, height: 21.8 mm, depth: 26 mm, color: light grey (similar RAL 7035)

ME-IO 18,8 B/FE 7/9U TBUS 7035 - Mounting base housing

2201961

https://www.phoenixcontact.com/us/products/2201961

ME-IO 18,8 C 3U 7035 - Housing cover

2201800

https://www.phoenixcontact.com/us/products/2201800



DIN rail housing, 3U, Housing cover, width: 18.9 mm, height: 32.8 mm, depth: 26 mm, color: light grey (similar RAL 7035)

ME-IO 18,8 C 9U 7035 - Housing cover

2201806

https://www.phoenixcontact.com/us/products/2201806

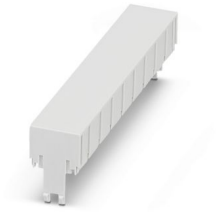

DIN rail housing, 9U, Housing cover, width: 18.9 mm, height: 98.8 mm, depth: 26 mm, color: light grey (similar RAL 7035)

ME-IO 18,8 B/FE 7/9U TBUS 7035 - Mounting base housing

2201961

https://www.phoenixcontact.com/us/products/2201961

ME 18,8 TBUS 1,5/5-ST-3,81KMGY - DIN rail bus connectors

2201813

https://www.phoenixcontact.com/us/products/2201813



DIN rail connector, color: light grey, nominal current: 8 A (parallel contacts), rated voltage (III/2): 125 V, contact surface: Gold, number of positions: 5, product range: TBUS5-18,8.., pitch: 3.81 mm, mounting: DIN rail mounting, locking: without, mounting: without, type of packaging: packed in cardboard, Item with gold-plated contacts, bus connectors for connecting with electronics housings, 5 parallel contacts

Phoenix Contact 2024 © - all rights reserved
https://www.phoenixcontact.com

Phoenix Contact USA
586 Fulling Mill Road
Middletown, PA 17057, United States
(+717) 944-1300
info@phoenixcon.com