SIEMENS

Data sheet 3VA5160-5EC36-0AA0



circuit breaker 3VA5 UL frame 125 breaking capacity class M 35kA @ 480 V 3-pole, line protection TM230, FTAM, In=60A overload protection Ir=60A fixed short-circuit protection Ii=5...10 x In cable connection on both sides

Model	
product brand name	SENTRON
product designation	Molded-case circuit breaker
product designation / according to UL file	MEAS
design of the product	System protection
design of the load switch / according to UL 489 / Heating, Air Conditioning, and Refrigeration circuit breaker (HACR Type)	Yes
design of the load switch / according to UL 489 / High-Intensity-Discharge circuit breaker (HID Type)	No
design of the load switch / according to UL 489 / Switching Duty circuit breaker (SWD Type)	No
design of the overcurrent release	TM230
protection function of the overcurrent release	LI
number of poles	3
General technical data	
insulation voltage / rated value	800 V
operating voltage / at DC / rated value	500 V
operating voltage / at AC / rated value	690 V
power loss [W] / maximum	15.4 W
power loss [W] / for rated value of the current / at AC / in hot operating state / per pole	5.13 W
mechanical service life (operating cycles) / typical	20 000
electrical endurance (operating cycles) / at AC-1 / at 380/415 V	8 000
electrical endurance (operating cycles) / at AC-1 / at 690 V	4 000
electrical endurance (operating cycles) / at 480 V	8 000
electrical endurance (operating cycles) / at 600 V	4 000
product feature / for neutral conductors / upgradable/retrofittable / short-circuit and overload proof	No
ground-fault monitoring version	without
product function	
● communication function	No
● other measurement function	No
Net Weight	1.034 kg
Current	
marking / according to UL 489 / 100%-rated breaker	No
operational current	
● at 40 °C	60 A
● at 45 °C	59 A
● at 50 °C	58 A
● at 55 °C	57 A
● at 60 °C	56 A
● at 65 °C	55 A

Subject to change without notice
© Copyright Siemens

● at 70 °C	54 A
Switching capacity according to IEC 60947	
switching capacity class of the circuit breaker	M
maximum short-circuit current breaking capacity (Icu)	
● at 240 V	85 kA
● at 415 V	55 kA
● at 690 V	7 kA
operating short-circuit current breaking capacity (Ics)	
● at 240 V	85 kA
● at 415 V	55 kA
● at 690 V	5 kA
short-circuit current making capacity (Icm)	
● at 240 V	187 kA
● at 415 V	121 kA
● at 690 V	11.9 kA
design of short-circuit protection	For switching power values in DC networks, see the 3VA molded case circuit breaker device manual; link to be found under Service & Support in the last chapter
Switching capacity according to UL 489	
current breaking capacity	
● at 240 V	85 kA
● at 480 V	35 kA
● at 600 Y/347 V	18 kA
Adjustable parameters	
adjustable response value setting current (Ir) / of the L-trip / with I2t characteristic	
● minimum	60 A
● maximum	60 A
adjustable response value delay time (tr) / for L-tripping / with I2t characteristic	
● minimum	1 s
● maximum	1 s
adjustable response value setting current (Ii) / for I-tripping	
● minimum	300 A
● maximum	600 A
adjustable absolute value setting current (InN) / for N-tripping	
● minimum	0 A
● maximum	0 A
adjustable current response value current / of the current-dependent overload release	42 ... 60 A
product function / grounding protection	No
Mechanical Design	
product component	
● undervoltage release	No
● voltage trigger	No
● trip indicator	No
height [in]	5.51 in
height	140 mm
width [in]	3 in
type of connectable conductor cross-sections / of the round conductor terminal / stranded	1 x (8 AWG - 3/0)
width	76.2 mm
depth [in]	3.01 in
depth	76.5 mm
Connections	
arrangement of electrical connectors / for main current circuit	Front connection
type of electrical connection / for main current circuit	circular conductor terminal on both sides
Auxiliary circuit	
number of CO contacts / for auxiliary contacts	0
Accessories	
product extension / optional / motor drive	Yes
Environmental conditions	

Subject to change without notice
© Copyright Siemens

protection class IP / on the front	IP40
ambient temperature	
● during operation / minimum	-25 °C
● during operation / maximum	70 °C
● during storage / minimum	-40 °C
● during storage / maximum	80 °C

Certificates

reference code / according to IEC 81346-2	Q

General Product Approval

Confirmation | Miscellaneous

General Product Approval	EMC	Declaration of Conformity	Test Certificates	
			Special Test Certificate	Type Test Certificates/Test Report

Marine / Shipping

Marine / Shipping		other	
		Miscellaneous	Confirmation

Further information

Siemens has decided to exit the Russian market (see here).
https://press.siemens.com/global/en/pressrelease/siemens-wind-down-russian-business
Siemens is working on the renewal of the current EAC certificates.
Please contact your local Siemens office on the status of validity of the EAC certification if you intend to import or offer to supply these products to an EAC relevant market (other than the sanctioned EAEU member states Russia or Belarus).
Information on the packaging
https://support.industry.siemens.com/cs/ww/en/view/109813875
Information- and Downloadcenter (Catalogs, Brochures,…)
http://www.siemens.com/lowvoltage/catalogs
Industry Mall (Online ordering system)
https://mall.industry.siemens.com/mall/en/en/Catalog/product?mlfb=3VA5160-5EC36-0AA0
Service&Support (Manuals, Certificates, Characteristics, FAQs,...)
https://support.industry.siemens.com/cs/ww/en/ps/3VA5160-5EC36-0AA0
Image database (product images, 2D dimension drawings, 3D models, device circuit diagrams, ...)
http://www.automation.siemens.com/bilddb/cax_en.aspx?mlfb=3VA5160-5EC36-0AA0
CAx-Online-Generator
http://www.siemens.com/cax
Tender specifications
http://www.siemens.com/specifications

Subject to change without notice
© Copyright Siemens

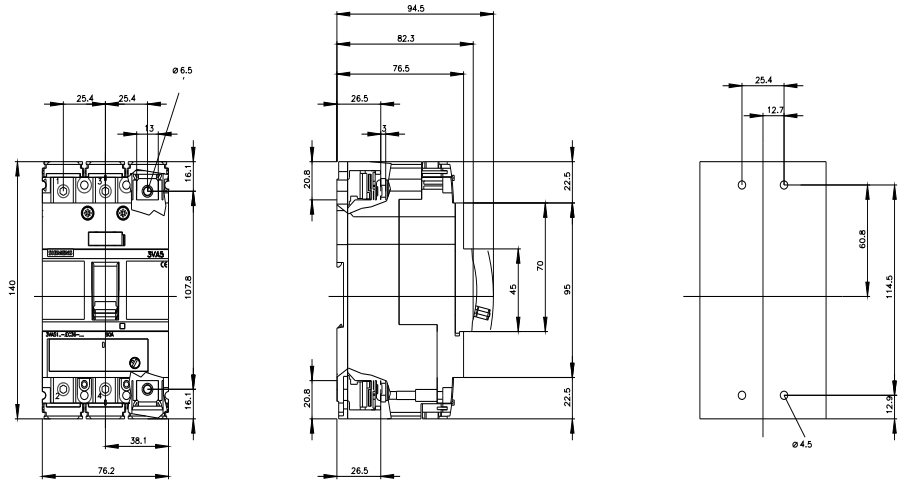

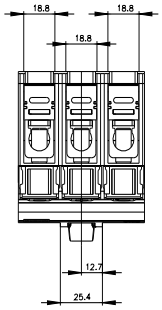

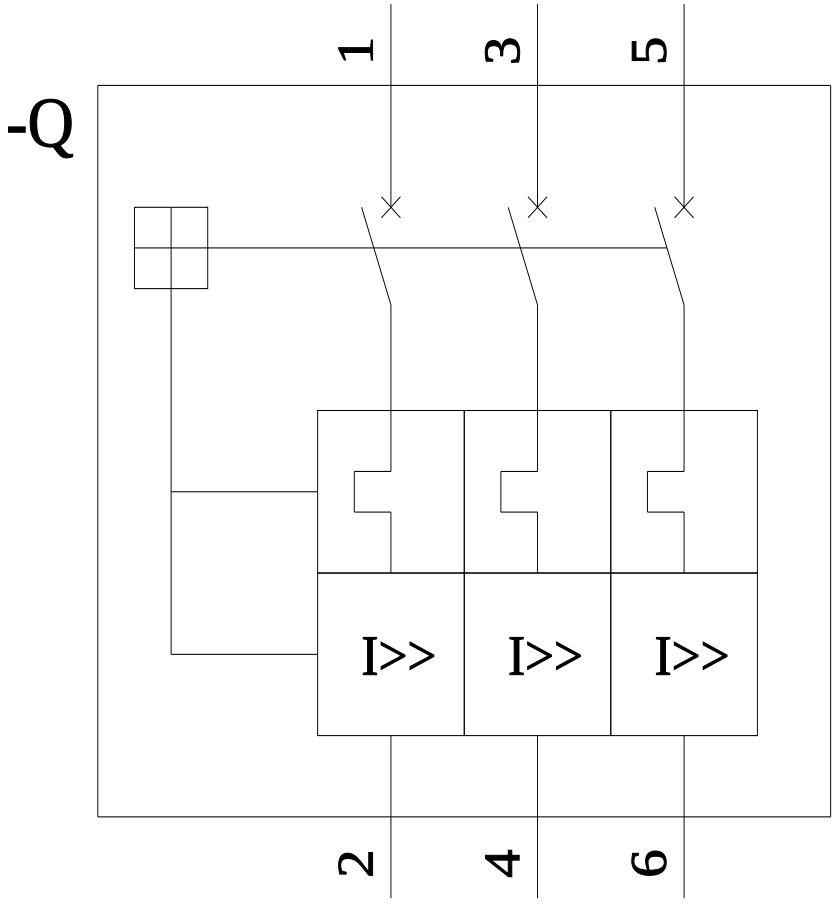

Subject to change without notice
© Copyright Siemens

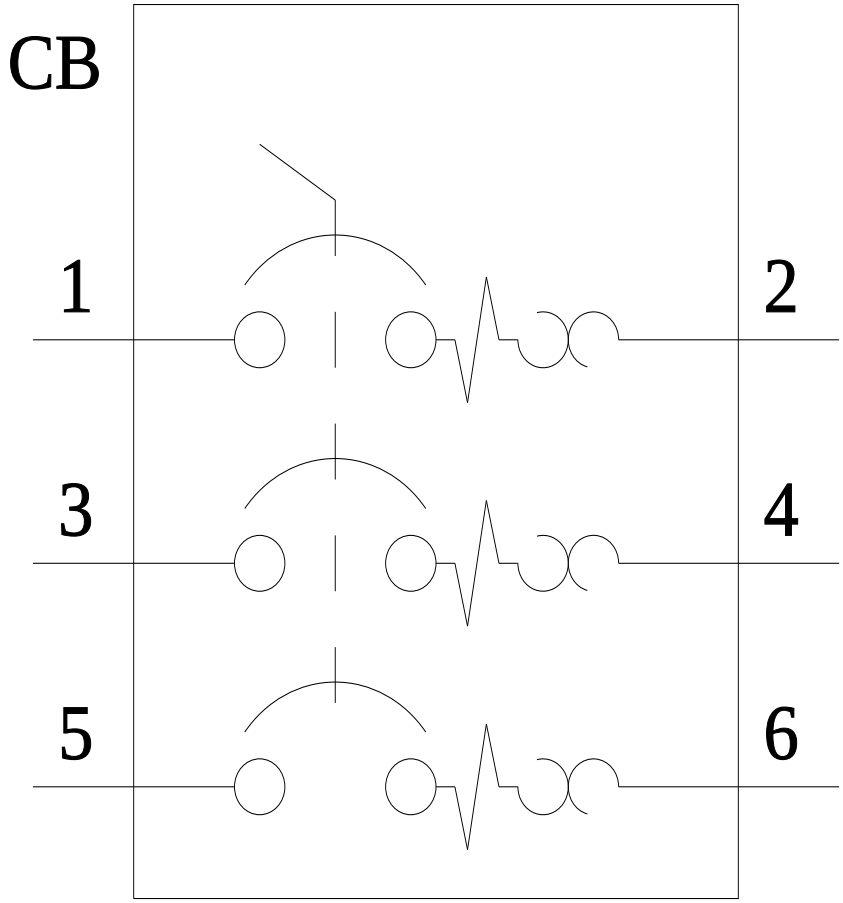

last modified: 7/15/2022

Subject to change without notice
© Copyright Siemens

Subject to change without notice
© Copyright Siemens