OWS-4021TA-4

High power micro speaker

Wideband speaker. Targeted for IoT devices and speech applications requiring excellent THD performance.



Characteristics

Size (ØxH) [mm]	40.0x21.0	
Sensitivity [dBSPL]	79.0±3 dB	1W/1.0m, free air
Impedance [Ω]	4	
Power [W]	3.0 / 5.0	nom / max, free air
F0 [Hz]	180	Free air
Termination	Terminals	

Specifications are subject to change without prior notice. Upon request Ole Wolff can supply further specifications, simulation parameters etc.

Mechanical drawing

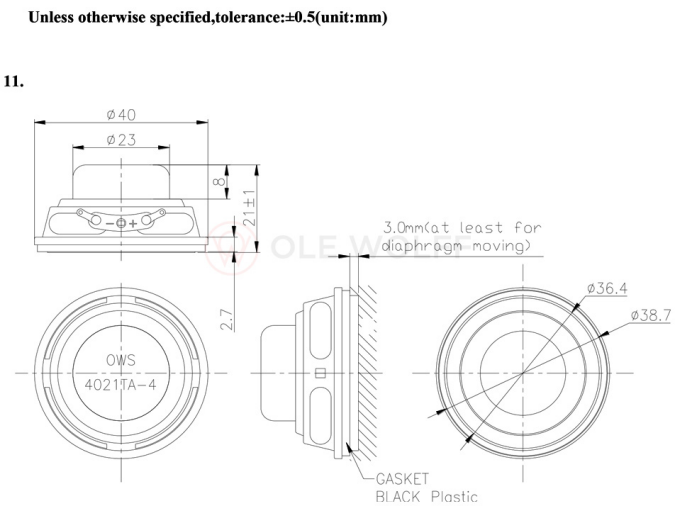

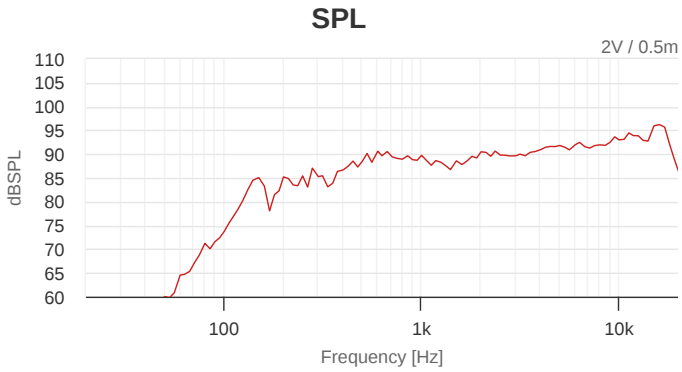

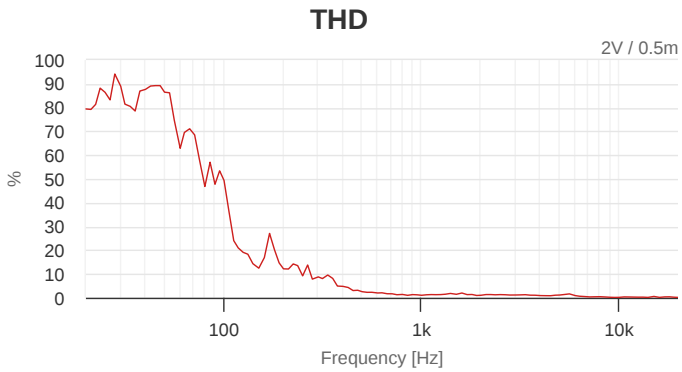

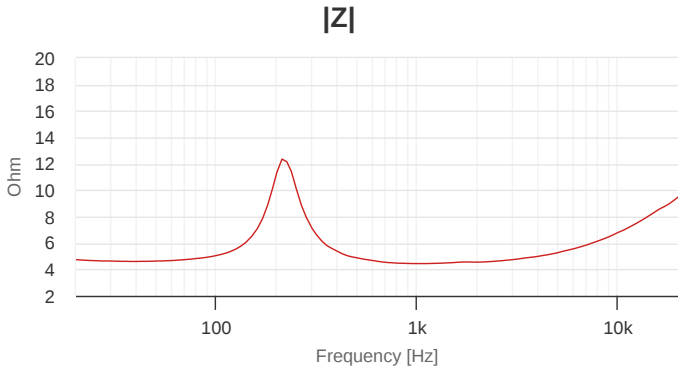

Ole Wolff Elektronik A/S, Roedengvej 14, 4180 Soroe, DK Denmark
T: +45 5783 3830 | sales@owolff.com