CUDEVICES



# **MODEL:** PP3-0620 | **DESCRIPTION:** DC POWER PLUG

### FEATURES

- round cover
- 1 A current rating



RoHS

## SPECIFICATIONS

| parameter | conditions/description | min | typ | max | units |
|---|---|---|---|---|---|
| rated input voltage | | | 20 | | Vdc |
| rated input current | | | | 1 | A |
| contact resistance | between plug and jack | | | 30 | mΩ |
| insulation resistance | at 100 Vdc | 50 | | | MΩ |
| voltage withstand | for 1 minute | | | 250 | Vac |
| insertion force | when mating with a standard jack | 0.3 | | 2.5 | kgf |
| withdrawal force | when mating with a standard jack | 0.3 | | 2.5 | kgf |
| operating temperature | | -25 | | 70 | °C |
| operating humidity | | | | 85 | % |
| life | | | 5,000 | | cycles |
| flammability rating | see material table | | | | |
| RoHS | yes | | | | |

## SOLDERABILITY

| parameter | conditions/description | min | typ | max | units |
|---|---|---|---|---|---|
| hand soldering | for maximum 1 second | 380 | 400 | 420 | °C |

## MECHANICAL DRAWING

units: mm
tolerance:
X≤1.0: ±0.1 mm
1.0<X≤6.0: ±0.2 mm
6.0<X≤12.0: ±0.3 mm
12.0<X≤25.0: ±0.4 mm
X>25.0: ±0.5 mm
unless otherwise noted

| ITEM | DESCRIPTION | MATERIAL | PLATING/COLOR |
|---|---|---|---|
| 1 | insulator | PA66 (UL94V-2) | black |
| 2 | outer barrel | brass | nickel |
| 3 | body | brass | nickel |
| 4 | center contact | phosphor bronze | nickel |
| 5 | crimp contact | iron | tin |
| 6 | cover | ABS (UL94HB) | black |

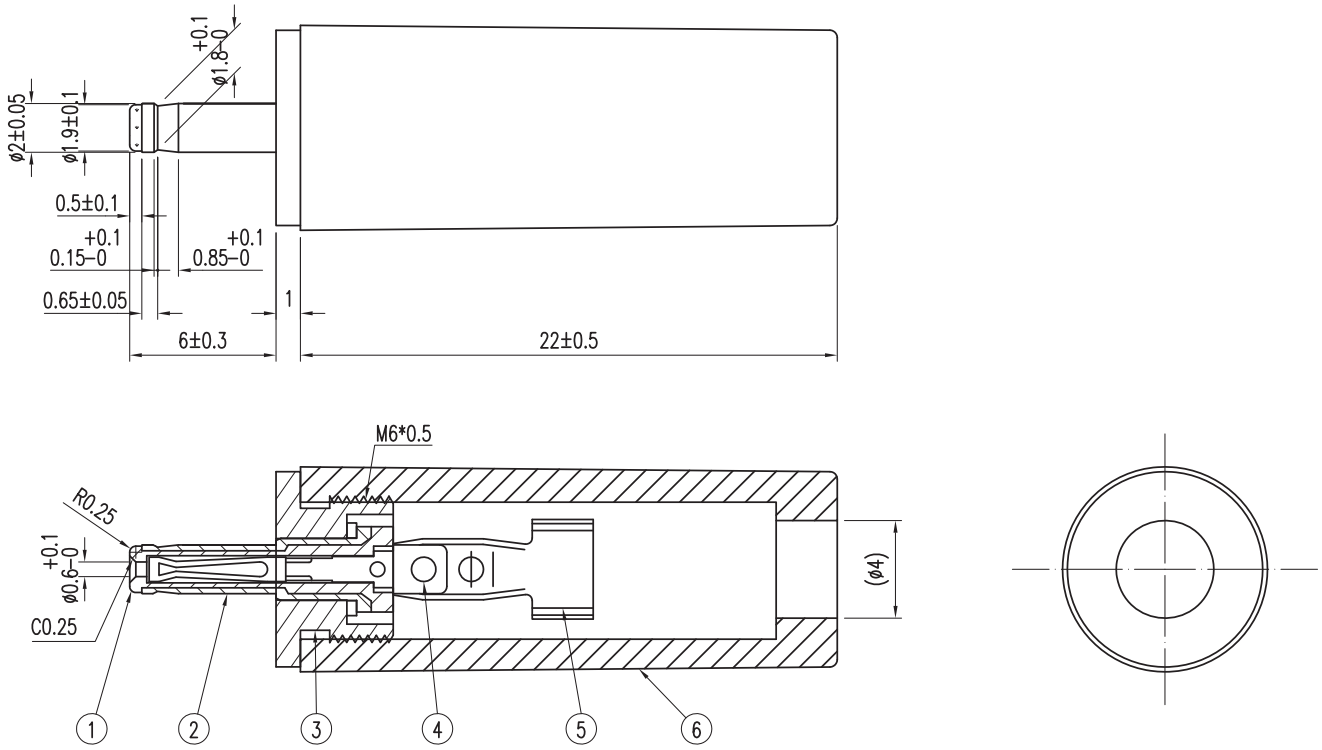

## REVISION HISTORY

| rev. | description | date |
|---|---|---|
| 1.0 | initial release | 06/15/2018 |
| 1.01 | brand update | 11/06/2019 |
| 1.02 | logo, datasheet style update | 08/05/2022 |

The revision history provided is for informational purposes only and is believed to be accurate.

CUI Devices offers a one (1) year limited warranty. Complete warranty information is listed on our website.

CUI Devices reserves the right to make changes to the product at any time without notice. Information provided by CUI Devices is believed to be accurate and reliable. However, no responsibility is assumed by CUI Devices for its use, nor for any infringements of patents or other rights of third parties which may result from its use.

CUI Devices products are not authorized or warranted for use as critical components in equipment that requires an extremely high level of reliability. A critical component is any component of a life support device or system whose failure to perform can be reasonably expected to cause the failure of the life support device or system, or to affect its safety or effectiveness.

**cuidevices.com**