DN SERIES-NEW D SUBMINIATURE INTERFACE CONNECTORS

General

The DN series are compact, rectangular multi-contact connectors developed to meet the demand for smaller and slimmer electronic equipment. 2.54 mm grid contact position and Direct dip soldering on PCB enable high density circuit designing at reduced cost. Aluminum die-cast shell and Metallic shell areshieledto prevent from Electro-Magnetic interference. 20, 26, 36 and 50 way available.

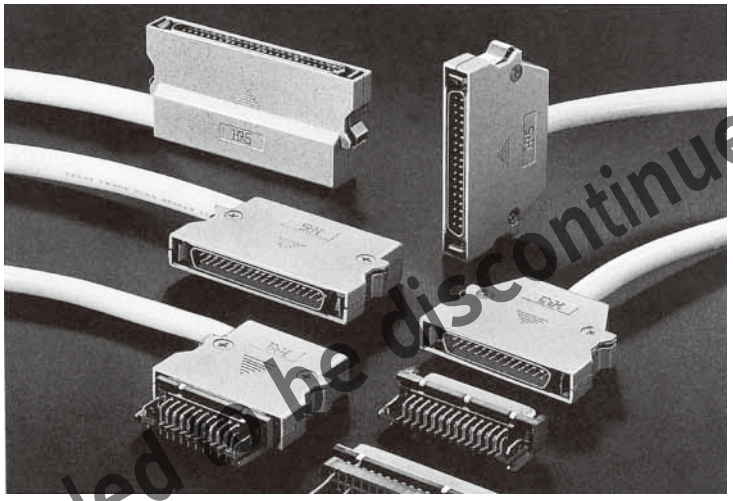

[Scheduled to be discontinued]

Features

1. 2.54 mm grid contact position enable high density circuit designing.
2. Stable quality due to the contact design based on our field-proven SM series (D sub-connector).
3. One-touch lock system ensures perfect operation.
4. The cover case uses a thin, low-back compact design that meets the needs of high density mounting. It can be mounted between 17.78 millimeters (700mil) substrates.
5. The cover case is made of aluminum diecast to shield aginst electromagnetic waves In a combination with a connector metal shell, the cover case is an ideal solution for noise.
6. Dip soldering connectors are provided with snap clamps for temporarily fixing the connector on the PCB.
7. IDC termination types are for standard 1.27 mm pitch cables, and are available for two types of cables: AWG26 and AWG28.
8. Crimp contact cables from AWG26 through AWG28.
9. Allows you to take out the cable vertically or horizontally, as your application requires.

Application

Office Automation, Computers, Communications Equipment, Factory Automation, Home Automation and other commercial applications needing high density interconnections.

Aug.1.2025 Copyright 2025 HIROSE ELECTRIC CO., LTD. All Rights Reserved.

Specifications and Material

Main specifications	
Current capacity	3A
Rated voltage	AC 200V
Insulation resistance	5000mΩ on higher at DC 500V
Contact resistance	20mΩ or less at DC 100mA
Withstand voltage	1 minute AC 1000 Vrms

Main materials used		
Shell	Aluminum dei-cash	Silver coating
Insulator	PBT*	Black
Contacts	Phosphor bronze	Nickel plating and Selective gold plating

*UL94V-0

Ordering Information

DN 10 — 26 S ( )
(1) (2) (3) (4) (8)

DN — 26 — CVE 1
(1) (3) (5)

DN 50 — 2628 PC 1
(1) (2) (6) (7)

(1) Series Number: DN
(2) Type
10: Right Angle Dlp Type
30: IDC Plug Type
50: Crimp Type
(3) No. of Pins: 20, 26, 36 and 50 way
(4) P: Plug
S: Receptacle
(5) Shell
CVE1: Angle Cable Exit Shell
CV1: Straight Cable Exit Shell
(6) Applicable Wire
2628: AWG#26 ~ AWG#28
(7) Type of Contact Pin
PC1: Bulk Pin Contact
PC2: Chain Pin Contact
(8) Specification
(50): RoHS compliant
(70): RoHS compliant

【Scheduled to be discontinued】

Cable specifications

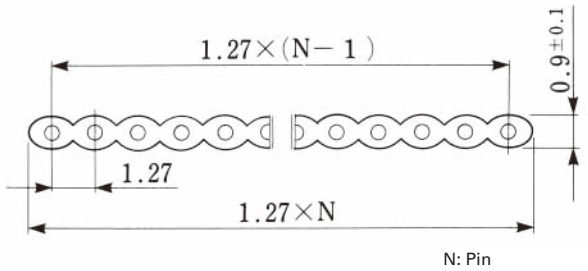

Pin: AWG#28(7/0.127)
AWG#26(7/0.16)

Aug.1.2025 Copyright 2025 HIROSE ELECTRIC CO., LTD. All Rights Reserved.

Crimp Pin Housing

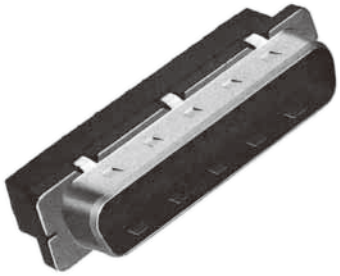

DN50-26P

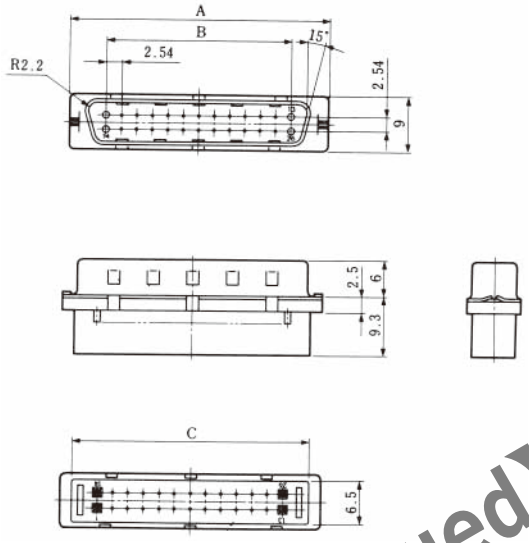

Unit: mm

HRS No.	No.of pin	Part No.	A	B	C	RoHS
225-0016-3	20	DN50-20P	35.36	22.86	31.38	YES
225-0004-4	26	DN50-26P	42.98	30.48	39	
225-0005-7	36	DN50-36P	55.68	43.18	51.7	
225-0006-0	50	DN50-50P	73.46	60.96	69.48	

【Scheduled to be discontinued】

IDC Plug

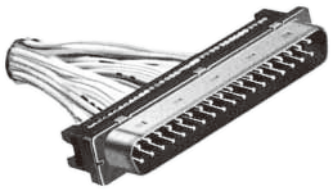

DN30-36P (50)

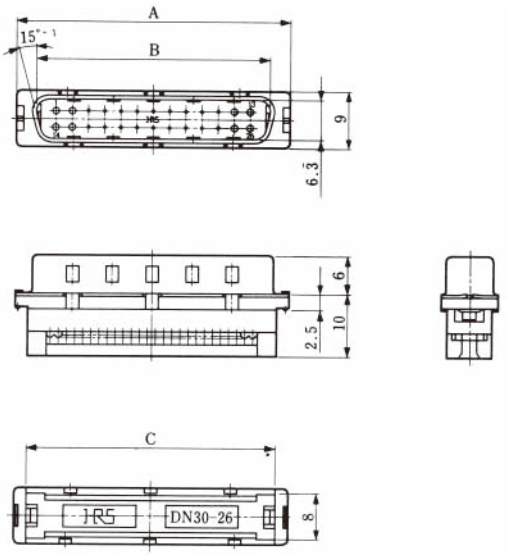

Unit: mm

HRS No.	No.of pin	Part No.	A	B	C	RoHS
225-0030-4-50	20	DN30-20P (50)	35.36	29.1	31.38	YES
225-0029-5-50	26	DN30-26P (50)	42.98	36.7	39	
225-0027-0-50	36	DN30-36P (50)	55.68	49.4	51.7	
225-0028-2-50	50	DN30-50P (50)	73.46	67.2	69.48	

Aug.1.2025 Copyright 2025 HIROSE ELECTRIC CO., LTD. All Rights Reserved.

Angle Cable Exit Shell

DN-26-CVE1

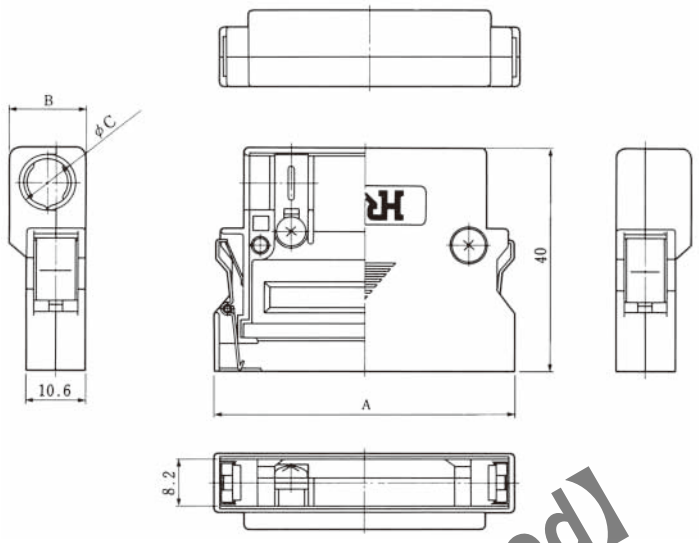

Unit: mm

HRS No.	No.of pin	Part No.	A	B	C	RoHS
225-0019-1	20	DN-20-CVE1	45.9	12.7	9	YES
225-0020-0	26	DN-26-CVE1	53.5	13.7	9.7	
225-0021-3	36	DN-36-CVE1	66.2	14.2	11	
225-0022-6	50	DN-50-CVE1	84	14.2	12×13	

【Scheduled to be discontinued】

Straight Cable Exit Shell

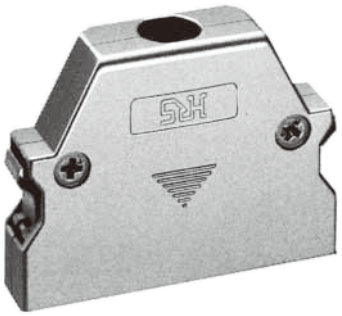

DN-26-CV1

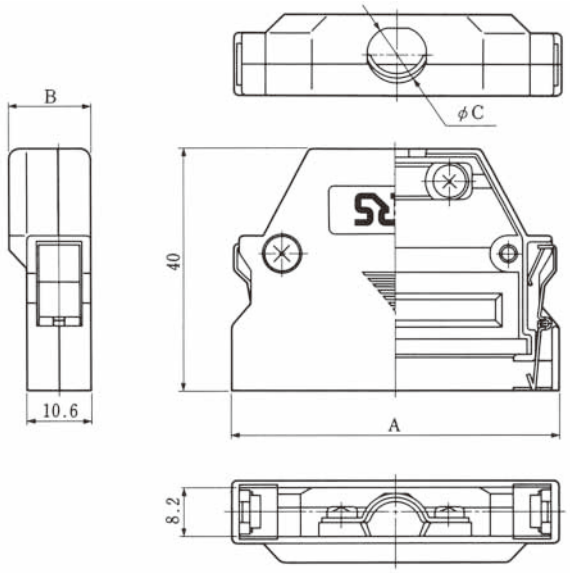

Unit: mm

HRS No.	No.of pin	Part No.	A	B	C	RoHS
225-0031-7	20	DN-20-CV1	45.9	13.7	9	YES
225-0024-1	26	DN-26-CV1	53.5	13.7	9.7	
225-0025-4	36	DN-36-CV1	66.2	14.2	11	

Aug.1.2025 Copyright 2025 HIROSE ELECTRIC CO., LTD. All Rights Reserved.

Right Angle P.C. Mount Receptacle

DN10-26S (70)

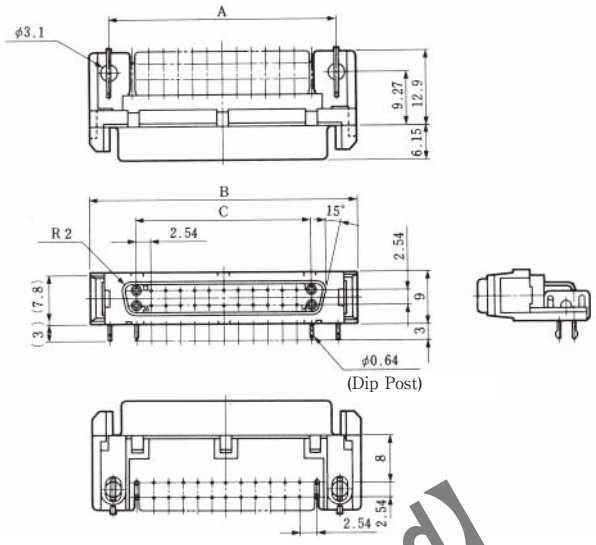

Unit: mm

HRS No.	No.of pin	Part No.	A	B	C	RoHS
225-0015-0-70	20	DN10-20S (70)	32	38.9	22.86	YES
225-0001-6-70	26	DN10-26S (70)	39.6	46.5	30.48	
225-0002-9-70	36	DN10-36S (70)	52.3	59.2	43.18	
225-0003-1-70	50	DN10-50S (70)	70.1	77	60.96	

【Scheduled to be discontinued】

PCB Layout

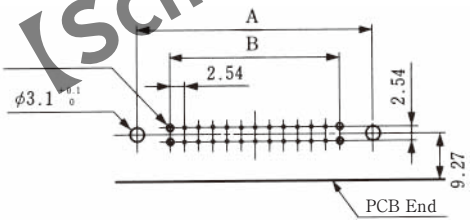

mounting panel thickness 1.6mm

Unit: mm

No.of pin	20	26	36	50
A	32.0	39.6	52.3	70.1
B	22.86	30.48	43.18	60.96

Aug.1.2025 Copyright 2025 HIROSE ELECTRIC CO., LTD. All Rights Reserved.

Straight P.C. Mount Receptacle

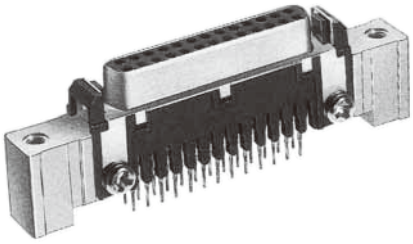

DN20B-26S (70)

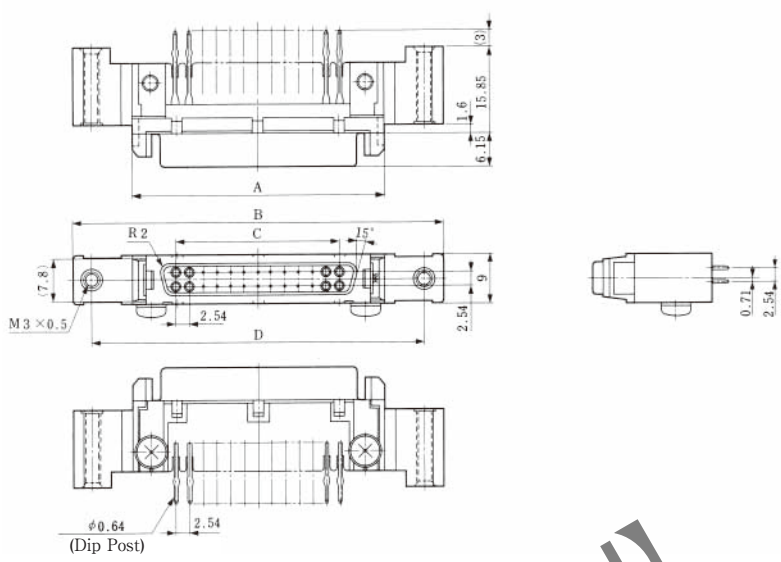

Unit: mm

HRS No.	No.of pin	Part No.	A	B	C	D	RoHS
225-0045-1-70	20	DN20B-20S (70)	38.9	60.9	22.86	53.9	YES
225-0046-4-70	26	DN20B-26S (70)	46.5	68.5	30.48	61.5	
225-0047-7-70	36	DN20B-36S (70)	59.2	81.2	43.18	74.2	
225-0048-0-70	50	DN20B-50S (70)	77	99	60.96	92	

【Scheduled to be discontinued】

PCB Layout

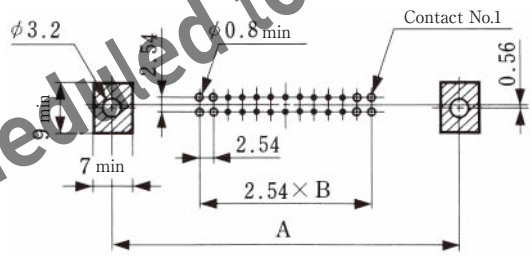

Panel Cutout

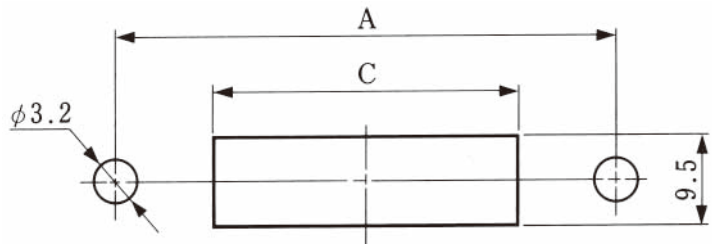

Unit: mm

No.of pin	A	B	C
20	53.9	9	40.9
26	61.5	12	48.5
36	74.2	17	61.2
50	92	24	79

Note: 1. Use a 1.6-mm thick panel
2. The substrate reference drawing shows the connector-mounting surface. The area marked with [ ] is to be prohibited from entering any pattern.
3. The substrate and panel are related to each other, with a 0/3.2 mounting hole as the reference point.
4. The panel is 1.6 millimeters thick.

Aug.1.2025 Copyright 2025 HIROSE ELECTRIC CO., LTD. All Rights Reserved.

Pin Crimp Terminal

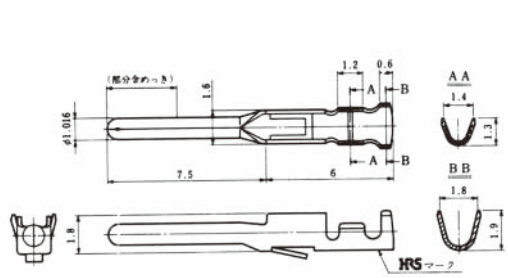

DN50-2628PC1
(Bulk)

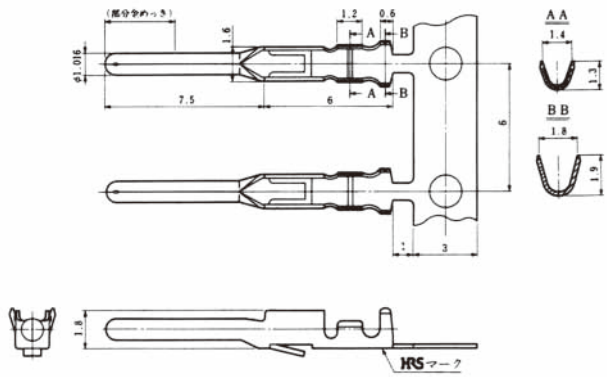

DN50-2628PC2
(Chain)

Note: Bulk in bags of 100pc. Chain on reels of 1,000pcs

HRS No.	Part No.	Remarks	RoHS
225-0007-2	DN50-2628PC1	Loose piece contact	YES
225-0008-5	DN50-2628PC2	Strip contact	

【Scheduled to be discontinued】

Applicable Wire

Applicable wire: AWG No.26 ~ AWG No.28

Outer diameter of applicable wire

Unit: mm

Way	20	26	36	50
Outer diameter	Max. 9.0	Max. 9.7	Max. 11.0	Max. 12.0

Tooling (for Crimp Plug)

• CM-105 Crimp Maching

This machine has been carefully designed to meet the many requests for advanced crimping machines that can be used in a wider range of applications. This machine offers easy setup adjustment and applicator mounting. We are confident that the machine will find many applications as an easy-to-use semi-automatic machine for crimping strip contacts.

POWER SOURCE	AC 100V 200W
TOTAL WEIGHT	75 kgs
PERFORMANCE	2,000-4,000 crimps per hour
WORK RANGE	Adaptable to other HIROSE dies

Semi-Auto Machine
CM-105C
(CL901-0001-0)
Applicator (Die) AP105-DN50-2628P
(CL901-2515-1)

Hand Tool
DN50-TA2628HC
(CL250-0101-0)

Aug.1.2025 Copyright 2025 HIROSE ELECTRIC CO., LTD. All Rights Reserved.

Tooling (for IDC Plug)

Hand Press

HRS No.	Part No.
550-0082-2	Hi-Flex termination press and accessories

Pressure Block

HRS No.	Part No.
902-0068-0	DN30-26PB
902-0069-3	DN30-36PB
902-0143-4	DN30-20PB
902-0144-7	DN30-50PB

Universal Guide Plate

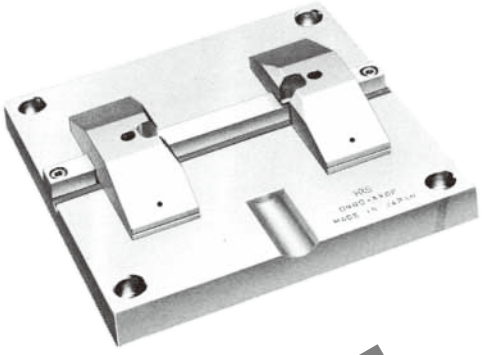

HRS No.	Part No.
902-0067-8	DN30-XXGP

【Scheduled to be discontinued】

Hi-Flex Termination Press and Accessories

General

The Hi-Flex termination press and its accessories connect the connectors to the HIF series ribbon cables more securely and quickly.

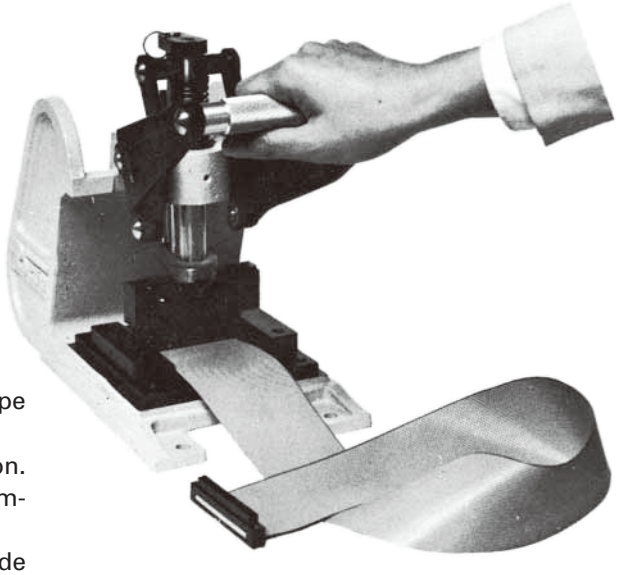

Features

1. No incomplete connections. A preventive ratcht-type device ensures against misconnections.
2. Prevents damage to connectors during connection. The guide plate works as a stopper to prevent damage to connectors due to connection pressure.
3. Easy to position the connector and cable. The guide plate case guide and cable stopper help positioning.
4. Capable of cable connection at an intermediate point when the cable stopper is removed.

Aug.1.2025 Copyright 2025 HIROSE ELECTRIC CO., LTD. All Rights Reserved.