EV7752-F-00A

Indutorless 2X15W Stereo BTL Fix Frequency Class D Audio Amplifier Evaluation Board

The Future of Analog IC Technology

DESCRIPTION

The EV7752-F-00A is the evaluation board for the MP7752, a 15W stereo BTL Fix Freuquency Inductorless Class D Audio Amplifier. It is one of MPS' products of fully integrated audio amplifiers which dramatically reduce solution size by integrating the following:

- 240mΩ power MOSFETs
- Startup / Shutdown pop elimination
- Short circuit protection circuits
- Advanced EMI performance
- Inductorless topology

The MP7752 utilizes Bridge Tied Load output structure capable of delivering stereo 15W into 8Ω speakers. It features in automatic shutdown function which can save power in battery-used system. The PLIMIT function is useful for limiting total output power by simply adjust a DC reference voltage at PLIMIT pin. MPS Class D Audio Amplifiers exhibit the high fidelity of a Class A/B amplifier at high efficiency.

FEATURES

- 15W Stereo BTL Output at V_{DD} = 16V into 8Ω loads
- 9.5W Stereo BTL Output at V_{DD} = 12V into 8Ω loads
- 90% Efficiency at 9.5W x 2 and V_{DD}=12V with 8Ω load, Stereo
- Low Noise (115μV Typical)
- 5V to 18V Operation from a Single Supply

APPLICATIONS

- TV
- DVD Receiver
- Active Speakers
- Home Theater

All MPS parts are lead-free and adhere to the RoHS directive. For MPS green status, please visit MPS website under Products, Quality Assurance page.

"MPS" and "The Future of Analog IC Technology" are registered trademarks of Monolithic Power Systems, Inc..

ELECTRICAL SPECIFICATIONS

Parameter	Symbol	Value	Units
Supply Voltage	V_{DD}	5~18	V

EV7752-F-00A EVALUATION BOARD



(L x W x H) 3.3" x 3.1" x 0.8"
8.5cm x 8.0cm x 2.0cm

Board Number	MPS IC Number
EV7752-F-00A	MP7752GF

THD+N vs. P_{OUT}

R_{LOAD}=8Ω+66μH, Freq=1kHz

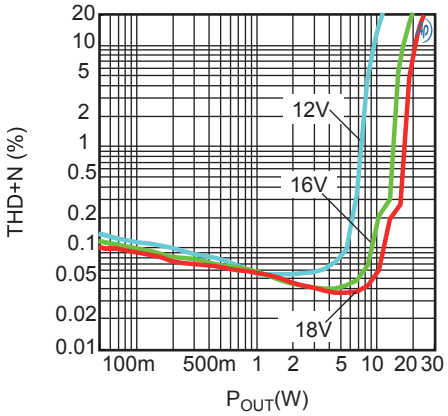

MPS Proprietary Information. Patent Protected. Unauthorized Photocopy and Duplication Prohibited.
© 2014 MPS. All Rights Reserved.

EVALUATION BOARD SCHEMATIC

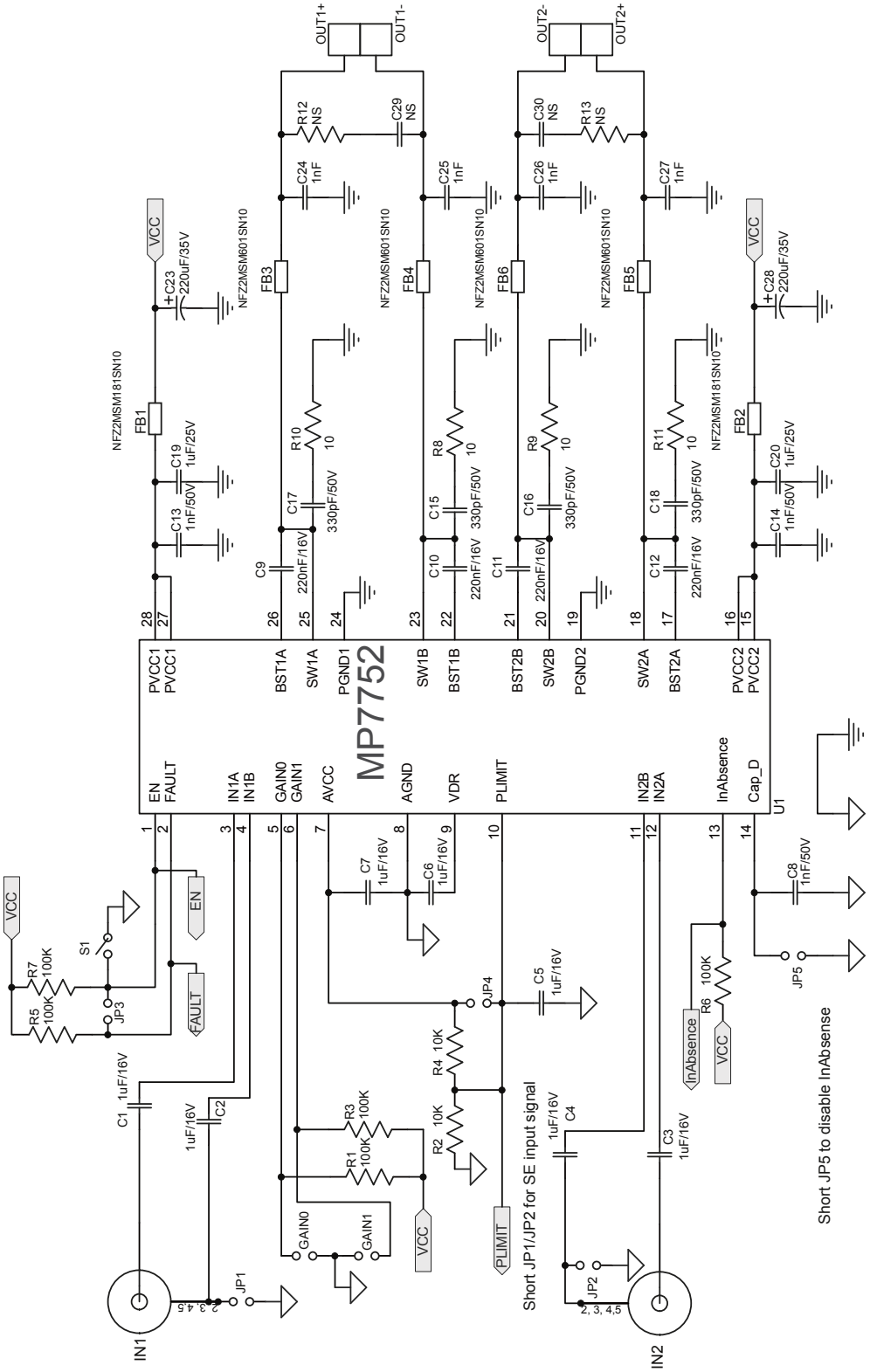

MPS Proprietary Information. Patent Protected. Unauthorized Photocopy and Duplication Prohibited.
© 2014 MPS. All Rights Reserved.

EV7752-F-00A BILL OF MATERIALS

Qty	Ref	Value	Description	Package	Manufacture	Manufacture_PN
7	C1, C2,C3, C4, C5, C6, C7	1μF/16V	Ceramic Capacitor;16V;X7R;0603;	0603	muRata	GRM188R71C105KA12D
7	C8, C13, C14,C24, C25, C26, C27	1nF/50V	Ceramic Capacitor;50V;C0G;0603;	0603	muRata	GRM1885C1H102JA01D
4	C9,C10, C11, C12	220nF	Ceramic Capacitor;50V;X7R;0402	0402	TAIYO YUDEN	UMK105BJ224KV-F
4	C15, C16, C17, C18	330pF	Ceramic Capacitor;50V;X7R;0402;	0402	TDK	C1005X7R1H331K
2	C19, C20	1μF/50V	Ceramic Capacitor;50V;X7R;0805	0805	muRata	GRM21BR71H105KA12L
2	C23, C28	220μF/35V	Electroelytic Capacitor;35V	SMD	江海	VTD-35V220
2	C29, C30	NS				
5	R1, R3, R5, R6, R7	100k	Film Resistor;1%, Film Resistor;1%;	0603	Yageo	RC0603FR-07100KL
2	R2, R4	10k	Film Resistor;1%	0603	Yageo	RC0603FR-0710KL
4	R8, R9, R10, R11	10	Film Resistor;1%	0805	Yageo	RC0805FR-0710RL
2	R12, R13	NS	Film Resistor;1%	0805	Yageo	RC0805FR-0710RL
2	FB1, FB2	NFZ2MSM181SN10	muRata NFZ Fitler for Class D Audio Amplifier	0806	muRata	NFZ2MSM181SN10
4	FB3, FB4, FB5, FB6	NFZ2MSM601SN10	muRata NFZ Fitler for Class D Audio Amplifier	0806	muRata	NFZ2MSM601SN10
1	S1	Reset Botton	SPST Reset Botton	DIP	ANY	
9	EN, FAULT, GND, IN1+, IN1-, IN2+, IN2-, InAbesence, PLIMIT		Connector;1.0mm	DIP	ANY	
7	GAIN0, GAIN1, JP1, JP2, JP3, JP4, JP5		Connector 2Pin 2.54mm	DIP	ANY	
2	IN1, IN2		Connector, RCA Jack, R/A	DIP	ANY	
3	OUT1+, OUT2+,VCC	Banana Jack	Banana Connector;Red	DIP	ANY	
3	OUT1-, OUT2-,GND	Banana Jack	Banana Connector;Black,	DIP	ANY	
1	U1	MP7752	MP7752/TSSOP28/EP	TSSOP28 /EP	MPS	MP7752GF

MPS Proprietary Information. Patent Protected. Unauthorized Photocopy and Duplication Prohibited.
© 2014 MPS. All Rights Reserved.

PRINTED CIRCUIT BOARD LAYOUT

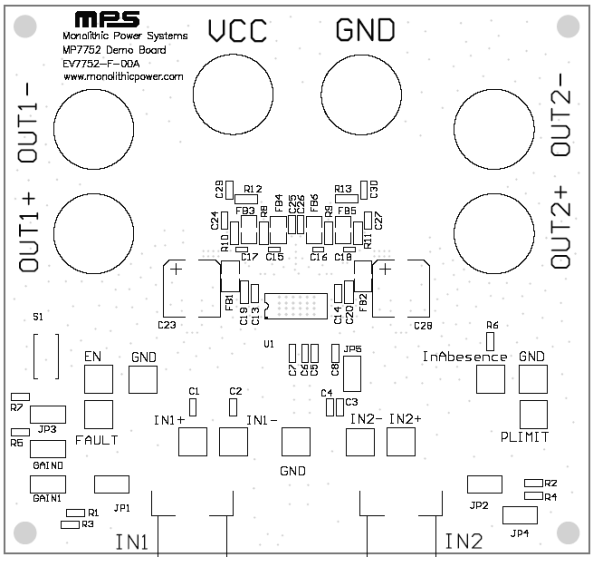

Figure 1—Top Silk Layer

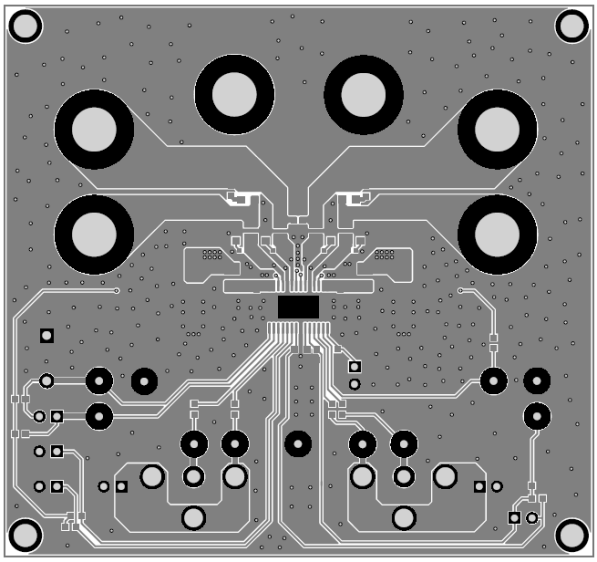

Figure 2—Top Layer

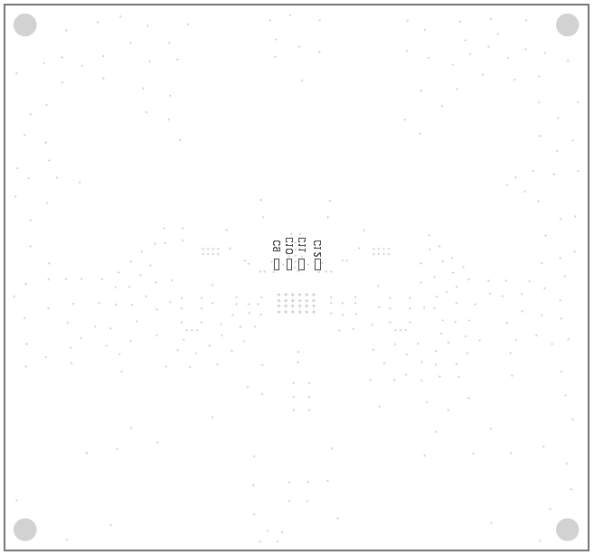

Figure 3—Bottom Silk Layer

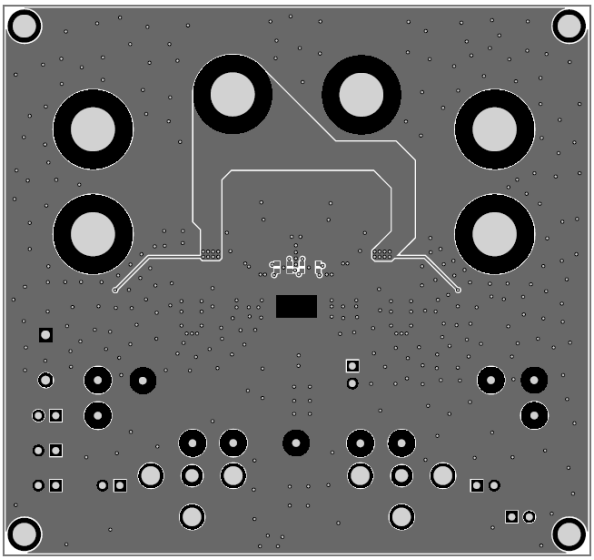

Figure 4—Bottom Layer

MPS Proprietary Information. Patent Protected. Unauthorized Photocopy and Duplication Prohibited.
© 2014 MPS. All Rights Reserved.

QUICK START GUIDE

EV7752-F-00A is set up from the factory for 5V to 18V single supply operating voltage with single-ended signal inputs. To use differential signal inputs, please remove the jumpers from JP1 and JP2.

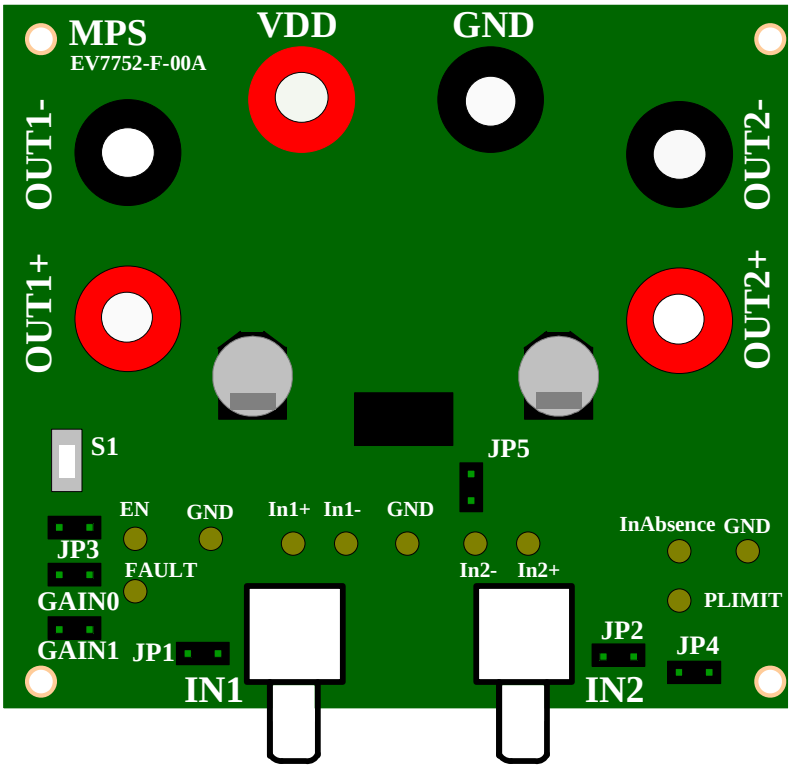

Figure 5—EV7752-F-00A Connection Diagram

1. Power, Signal and Load Impedance Requirements
    a. Power supply: 5V to 18V (12V typical), 3A maximum (1.8A typical).
    b. 0V to 2VRMS (max) audio signal source.
    c. Speaker: typically 4Ω to 8Ω (8Ω typical);
2. Setup Condition for 12V Operation
    a. Adjust the DC power supply to 12V (do not turn on).
    b. Connect the outputs to the external speakers.
    c. Connect the DC power supply to the power input terminals.
    d. Set the voltage gain by GAIN0 and GAIN1 jumpers, default voltage gain=20dB.
    e. Set the PLIMIT voltage to target output power level. Default setting is 1/2 AVCC, 2.75V equivalent.
    e. Connect the audio input signal source to the amplifier inputs (IN1 and IN2).
3. Music Turn-on/off Sequence
    a. Push button S1 to disable this EVB, release S1 to enable (default position).
    b. Turn-on/off the power supply.

MPS Proprietary Information. Patent Protected. Unauthorized Photocopy and Duplication Prohibited.
© 2014 MPS. All Rights Reserved.

APPLICATION INFORMATION

1. Typical Output Power vs. PLIMIT Voltage Table

Table 1: Power Limit Typical Operation

Test Condition	PLIMIT Voltage	Output Voltage (Vp-p)	Output Power (~10% THD)
VDD=12V, Vin=1Vrms, Load=8Ω, Gain=20dB	0.80V	14.9	5.0W
VDD=16V, Vin=1Vrms, Load=8Ω, Gain=20dB	0.80V	14.9	5.0W
VDD=16V, Vin=1Vrms, Load=8Ω, Gain=20dB	1.44V	23.6	10.0W
VDD=18V, Vin=1Vrms, Load=8Ω, Gain=20dB	1.44V	23.6	10.0W

PLIMIT adjust methods:

a. Adjust resistor divider R2 and R4 to set PLIMIT reference voltage.
b. Short JP4 to connect PLIMIT pin to AVCC directly. (disable power limit function)

2. Voltage Gain Setting Table

Table 2: Gain Setting

GAIN0	GAIN1	Typical GAIN (dB)	Typical Input Impedance (kΩ)
0	0	20	75
1	0	26	50
0	1	32	30
1	1	36	20

3. InAbsence Function

InAbsence function and its delay time are controlled by JP5 and C8.

a. Short JP5 to disable InAbsence function.

b. Adjust C_R to set delay time after input signal is absence. Delay time is defined as:

$$T_{delay} = 1.6 \times 10^8 \times C_R [sec]$$

C_R = C8 in EV7752-F-00A, a 1nF capacitor provides ~160ms delay time.

For more information, please consult MP7752 datasheet.

NOTICE: The information in this document is subject to change without notice. Please contact MPS for current specifications. Users should warrant and guarantee that third party Intellectual Property rights are not infringed upon when integrating MPS products into any application. MPS will not assume any legal responsibility for any said applications.

MPS Proprietary Information. Patent Protected. Unauthorized Photocopy and Duplication Prohibited.
© 2014 MPS. All Rights Reserved.