CUI DEVICES

MODEL: SJ-3553A-SMT-TR-67 | **DESCRIPTION:** AUDIO JACK

FEATURES
- IP67 waterproof
- low profile
- surface mount
- mounting tab



SPECIFICATIONS

parameter	conditions/description	min	typ	max	units
rated input voltage			12		Vdc
rated input current				1	A
contact resistance[1]	between terminal and mating plug between terminal and shunt			50 30	mΩ mΩ
insulation resistance	at 500 Vdc between adjacent contacts	100			MΩ
voltage withstand	for 1 minute between adjacent contacts			250	Vac
insertion/withdrawal force		0.4		2.0	kg
operating temperature		-30		85	°C
life	at a rate of 500 cycles/hour		10,000		cycles
flammability rating	UL94V-0				
RoHS	yes				
IP level	IP67				

Note: 1. When measured at a current of less than 100 mA/1 kHz
2. All specifications measured at 10~35°C, humidity at 45~85%, under standard atmospheric pressure, unless otherwise noted.

SOLDERABILITY

parameter	conditions/description	min	typ	max	units
reel storage	at relative humidity <60%			30	°C
reflow soldering[3]	see reflow profile		260	270	°C

Note: 3. It is recommended to reflow solder within 72 hours from opening vacuum packaging at a temperature <30°C & relative humidity <60%.

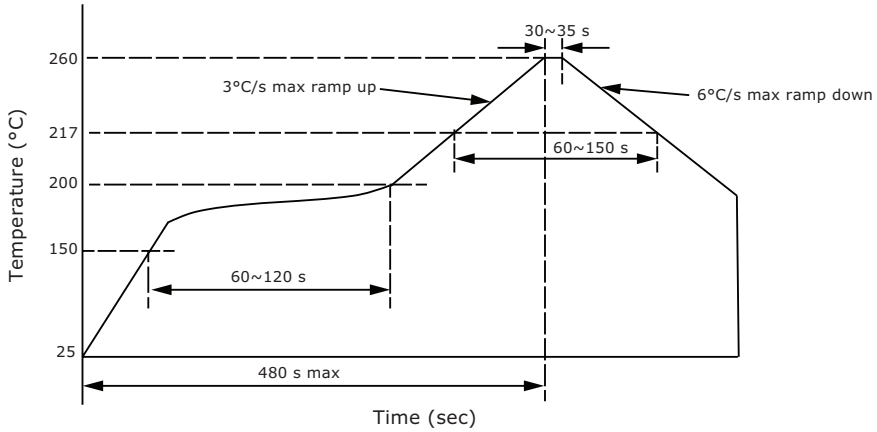

MECHANICAL DRAWING

units: mm
tolerance:
X.X ±0.2 mm
X.XX ±0.15 mm
PCB: ±0.10 mm

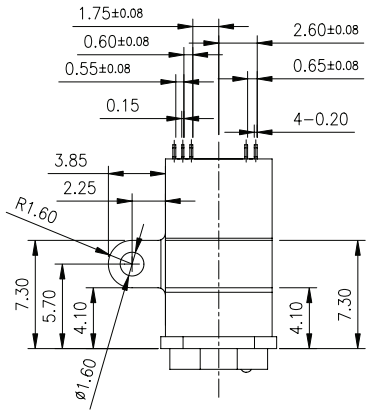

	MATERIAL	PLATING
assistant pin	stainless steel	matte tin
ring 2 contact	PBS	gold flash over nickel overall
sleeve contact	PBS	
tip contacts	titanium copper alloy	
ring 1 contact	PBS	
cap	PA-6T	black
housing	PA-6T	black
o-ring (OR-60)	silicone	black

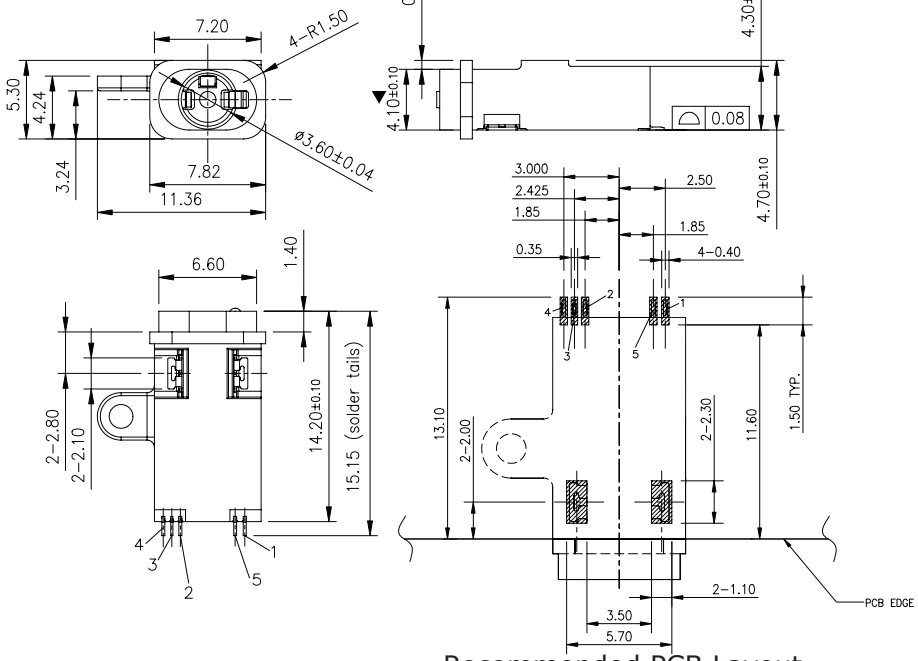

Recommended PCB Layout
Top View

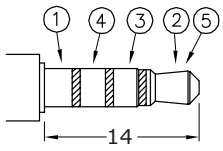

Ø3.5 MATING PLUG

Schematic	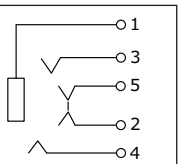
PIN	
1	sleeve
2	tip
3	ring 1
4	ring 2
5	tip

O-ring (P/N: OR-60)

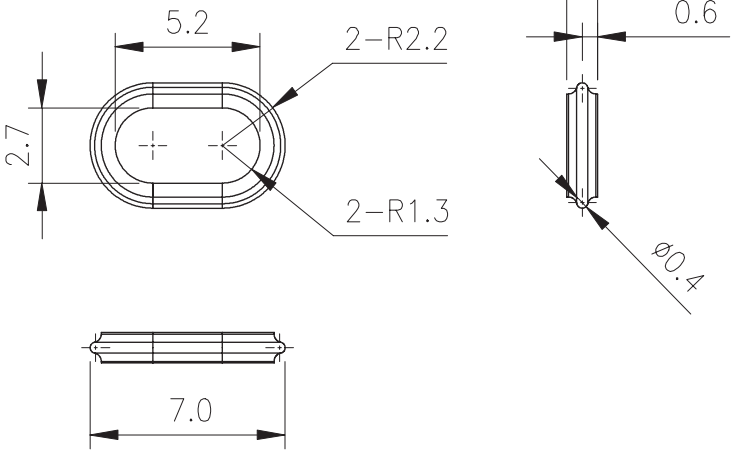

ASSEMBLY REFERENCE

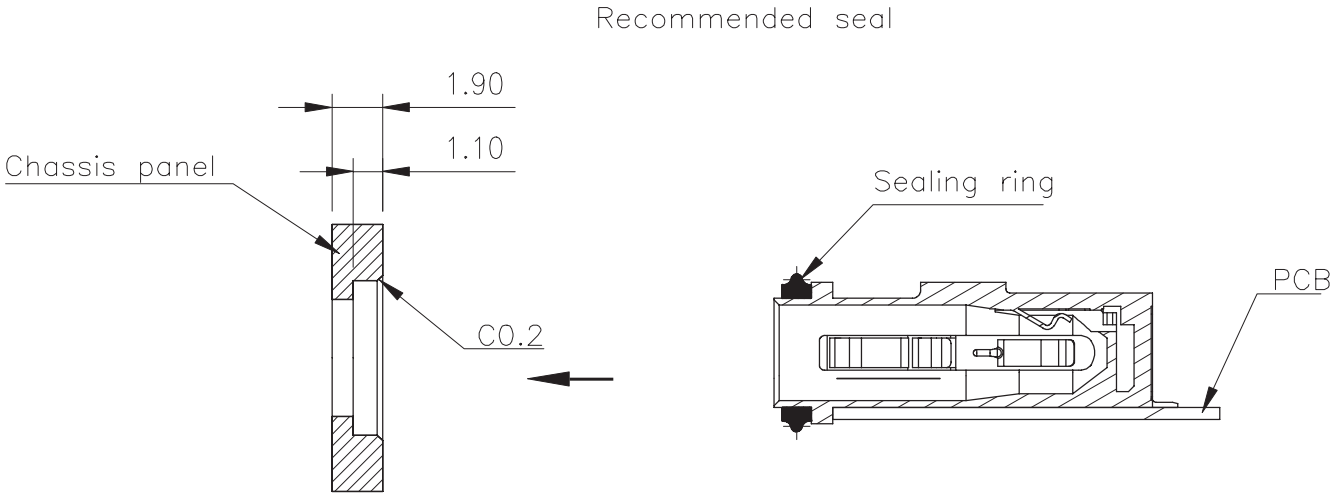

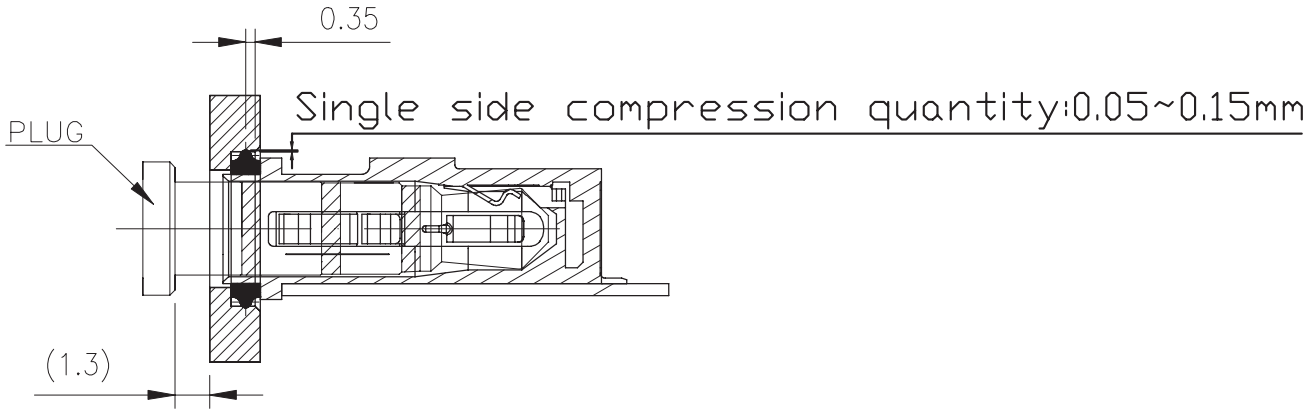

PACKAGING

units: mm

Reel Size: Ø330 mm
Reel QTY: 700 pcs per reel

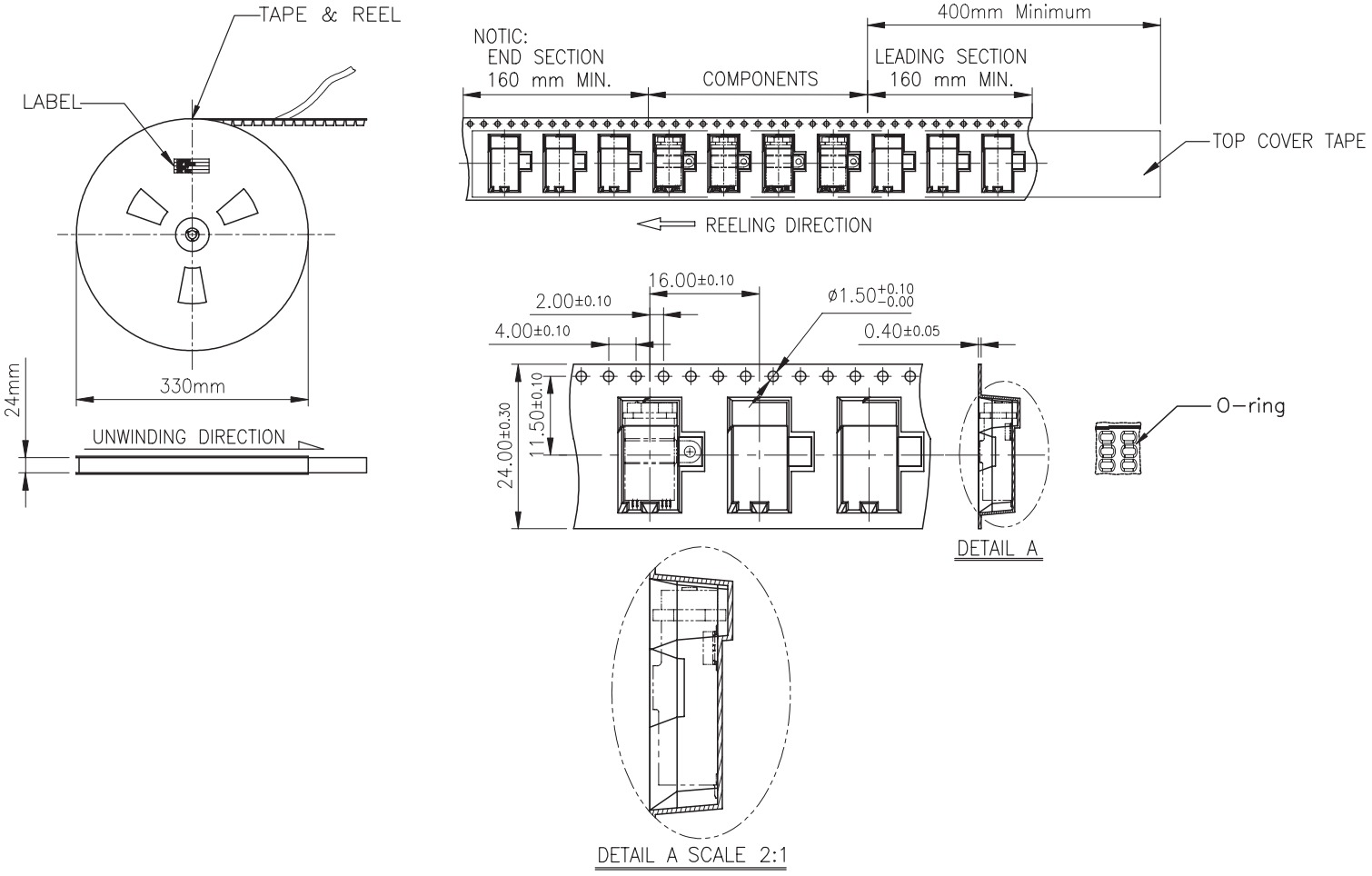

REVISION HISTORY

rev.	description	date
1.0	initial release	12/05/2018
1.01	brand update	10/08/2019
1.02	added o-ring p/n	04/07/2022

The revision history provided is for informational purposes only and is believed to be accurate.

CUI DEVICES

CUI Devices offers a one (1) year limited warranty. Complete warranty information is listed on our website.

CUI Devices reserves the right to make changes to the product at any time without notice. Information provided by CUI Devices is believed to be accurate and reliable. However, no responsibility is assumed by CUI Devices for its use, nor for any infringements of patents or other rights of third parties which may result from its use.

CUI Devices products are not authorized or warranted for use as critical components in equipment that requires an extremely high level of reliability. A critical component is any component of a life support device or system whose failure to perform can be reasonably expected to cause the failure of the life support device or system, or to affect its safety or effectiveness.

cuidevices.com