ST-REL4-KG230/21-21 - Relay connectors

2822419

https://www.phoenixcontact.com/us/products/2822419

Please be informed that the data shown in this PDF document is generated from our online catalog. Please find the complete data in the user documentation. Our general terms of use for downloads are valid.



Relay connector, equipped with miniature switching relay, contacts (AgNi): medium to large loads, 2 changeover contacts, input voltage 230 V AC/DC, with LED display, pluggable into basic terminal blocks

Commercial data

Item number	2822419
Packing unit	10 pc
Minimum order quantity	1 pc
Sales key	C460
Product key	DK61B2
GTIN	4017918077273
Weight per piece (including packing)	46.86 g
Weight per piece (excluding packing)	46.86 g
Customs tariff number	85364900
Country of origin	DE

Technical data

Product properties

Product type	Relay Module
Operating mode	100% operating factor
Mechanical service life	approx. 2x 10^7 cycles

Data management status

Date of last data management	03.07.2025

Electrical properties

Maximum power dissipation for nominal condition	0.92 W
Test voltage (Winding/contact)	2.5 kV AC (50 Hz, 1 min., winding/contact)
Test voltage (Changeover contact/changeover contact)	1 kV AC (50 Hz, 1 min., changeover contact/changeover contact)

Input data

Coil side

Nominal input voltage U_N	230 V AC/DC
Input voltage range	207 V AC/DC ... 253 V AC/DC (20 °C)
Drive and function	monostable
Drive (polarity)	polarized
Typical input current at U_N	4 mA
Typical response time	6 ms (with DC)
Typical release time	7 ms (with DC)
Protective circuit	Bridge rectifier, varistor
Operating voltage display	yes

Output data

Switching

Contact switching type	2 changeover contacts
Type of switch contact	Single contact
Contact material	AgNi
Maximum switching voltage	250 V AC/DC
Limiting continuous current	3 A
Maximum inrush current	5 A
Interrupting rating (ohmic load) max.	70 W (at 24 V DC)
	85 W (at 48 V DC)
	60 W (at 60 V DC)
	40 W (at 110 V DC)
	60 W (at 220 V DC)
	750 VA (for 250 V AC)

Dimensions

Width	27 mm
Height	33 mm
Depth	66.5 mm

Material specifications

Color	green (RAL 6021)

Environmental and real-life conditions

Ambient conditions

Ambient temperature (operation)	-20 °C ... 50 °C
Ambient temperature (storage/transport)	-20 °C ... 70 °C

Standards and regulations

Standards/regulations	DIN VDE 0110b, Gr. C for 250 V DC
	IEC 60255/DIN VDE 0435 (in relevant parts)
	DIN EN 50178/VDE 0160 (in relevant parts)
	EN 60730/DIN VDE 0631
	DIN VDE 0160 (in relevant parts)

Mounting

Mounting type	Plug-in mounting

Drawings

Circuit diagram

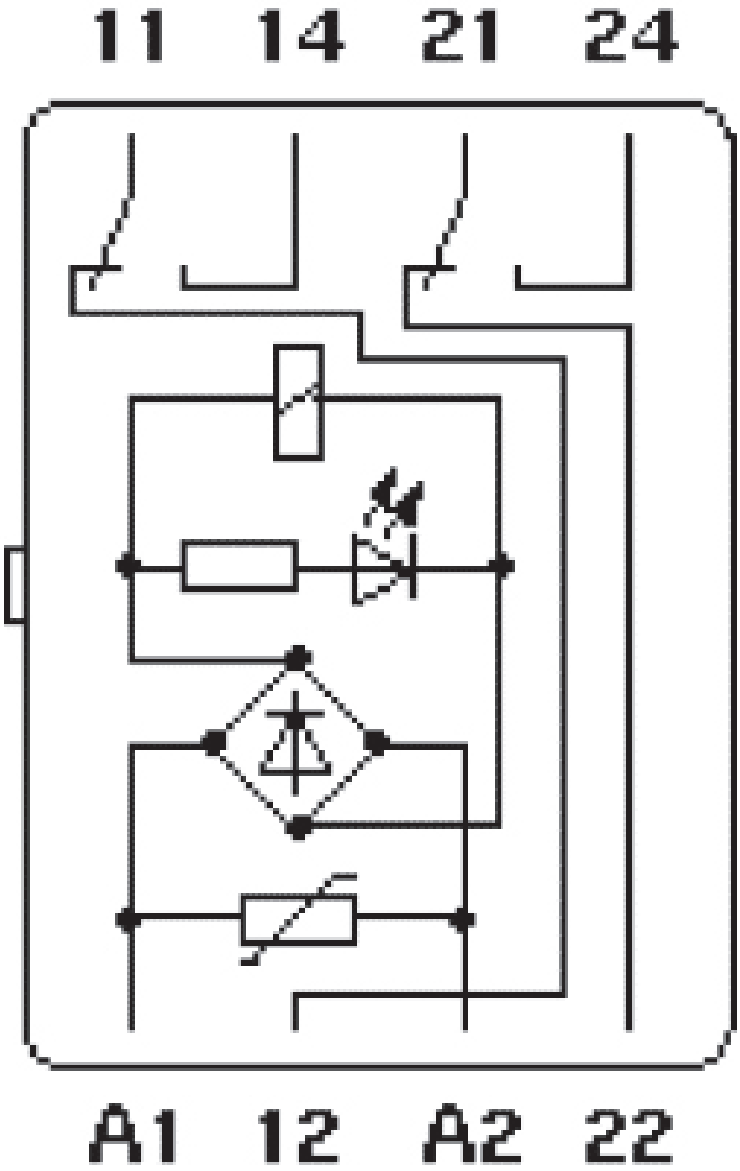

Approvals

To download certificates, visit the product detail page: https://www.phoenixcontact.com/us/products/2822419

EAC
Approval ID: RU*C-DE.*08.B.00010

Classifications

ECLASS

ECLASS-13.0	27371601
ECLASS-15.0	27371601

ETIM

ETIM 9.0	EC001437

UNSPSC

UNSPSC 21.0	39122300

Environmental product compliance

EU RoHS

Fulfills EU RoHS substance requirements	Yes
Exemption	7(a), 7(c)-I

China RoHS

Environment friendly use period (EFUP)	EFUP-50
	An article-related China RoHS declaration table can be found in the download area for the respective article under "Manufacturer declaration". For all articles with EFUP-E, no China RoHS declaration table issued and required.

EU REACH SVHC

REACH candidate substance (CAS No.)	Hexahydromethylphthalic anhydride(CAS: n/a)
	Lead(CAS: 7439-92-1)
SCIP	1fd31008-9636-41d6-954e-8239feeb2e4f

Phoenix Contact 2025 © - all rights reserved
https://www.phoenixcontact.com

Phoenix Contact USA
586 Fulling Mill Road
Middletown, PA 17057, United States
(+717) 944-1300
info@phoenixcon.com