PTPOWER 35 OG - High-current terminal block

3212095

https://www.phoenixcontact.com/us/products/3212095

Please be informed that the data shown in this PDF document is generated from our online catalog. Please find the complete data in the user documentation. Our general terms of use for downloads are valid.

High-current terminal block, nom. voltage: 1000 V, nominal current: 125 A, number of connections: 2, number of positions: 1, connection method: PowerTurn connection, Rated cross section: 35 mm^2, cross section: 2.5 mm^2 - 35 mm^2, mounting type: NS 35/15, color: orange

Your advantages

- Quick and easy connection is now also possible for large conductors with the high-current terminal block
- The compact design and front connection enable wiring in a confined space
- The Push-in connection terminal blocks are characterized by the system features of the CLIPLINE complete system and by easy and tool-free wiring of conductors with ferrules or solid conductors
- In addition to the testing option in the double function shaft, all terminal blocks provide an additional test pick-off

Commercial data

Item number	3212095
Packing unit	10 pc
Minimum order quantity	10 pc
Sales key	BE22
Product key	BE2211
GTIN	4055626230542
Weight per piece (including packing)	92.1 g
Weight per piece (excluding packing)	83.76 g
Customs tariff number	85369010
Country of origin	PL

Technical data

Product properties

Product type	High current terminal block
Number of positions	1
Number of connections	2
Number of rows	1
Potentials	1

Insulation characteristics

Overvoltage category	III
Degree of pollution	3

Electrical properties

Rated surge voltage	8 kV
Maximum power dissipation for nominal condition	4.06 W

Connection data

Number of connections per level	2
Nominal cross section	35 mm²
Rated cross section AWG	2
Stripping length	25 mm
Conductor cross section rigid	2.5 mm² ... 35 mm²
Cross section AWG	12 ... 2 (converted acc. to IEC)
Conductor cross section flexible	2.5 mm² ... 35 mm²
Conductor cross section, flexible [AWG]	12 ... 2 (converted acc. to IEC)
Conductor cross-section flexible (ferrule without plastic sleeve)	2.5 mm² ... 35 mm²
Flexible conductor cross section (ferrule with plastic sleeve)	2.5 mm² ... 35 mm²
Nominal current	125 A
Maximum load current	125 A (with 35 mm² conductor cross section)
Nominal voltage	1000 V
Nominal cross section	35 mm²

Connection cross sections directly pluggable

Conductor cross section rigid	2.5 mm² ... 35 mm²
Conductor cross section, rigid [AWG]	12 ... 2 (converted acc. to IEC)
Conductor cross-section flexible (ferrule without plastic sleeve)	2.5 mm² ... 35 mm²
Flexible conductor cross section (ferrule with plastic sleeve)	2.5 mm² ... 35 mm²

Ex data

Rated data (ATEX/IECEx)

Identification	Ⓔx II 2 GD Ex eb IIC Gb
Operating temperature range	-60 °C ... 110 °C
Ex-certified accessories	1206612 SZF 3-1,0X5,5

	1201662 E/AL-NS 35
List of bridges	Plug-in bridge / FBS 2-16 / 3005963
Bridge data	89 A / 25 mm²
Ex temperature increase	40 K (120 A/35 mm²)
Rated voltage	690 V
for bridging with bridge	690 V
Rated insulation voltage	660 V
output	(Permanent)

Ex level General

Rated current	109 A
Maximum load current	109 A
Contact resistance	0.16 mΩ

Ex connection data General

Ferrule length	25 mm
Stripping length	25 mm
Nominal cross section	35 mm²
Rated cross section AWG	2
Connection capacity rigid	2.5 mm² ... 35 mm²
Connection capacity AWG	12 ... 2
Conductor cross section flexible, with ferrule without plastic sleeve min.	6 mm²
Conductor cross section flexible, with ferrule without plastic sleeve max.	35 mm²

Dimensions

Width	16 mm
Height	91.6 mm
Depth on NS 35/7,5	69.8 mm
Depth on NS 35/15	77.3 mm

Material specifications

Color	orange
Flammability rating according to UL 94	V0
Insulating material group	I
Insulating material	PA
Static insulating material application in cold	-60 °C
Relative insulation material temperature index (Elec., UL 746 B)	130 °C
Fire protection for rail vehicles (DIN EN 45545-2) R22	HL 1 - HL 3
Fire protection for rail vehicles (DIN EN 45545-2) R23	HL 1 - HL 3
Fire protection for rail vehicles (DIN EN 45545-2) R24	HL 1 - HL 3
Fire protection for rail vehicles (DIN EN 45545-2) R26	HL 1 - HL 3
Surface flammability NFPA 130 (ASTM E 162)	passed
Specific optical density of smoke NFPA 130 (ASTM E 662)	passed
Smoke gas toxicity NFPA 130 (SMP 800C)	passed

Mechanical properties

Mechanical data

Open side panel	No

Environmental and real-life conditions

Ambient conditions

Ambient temperature (operation)	-60 °C ... 110 °C (Operating temperature range incl. self-heating; for max. short-term operating temperature, see RTI Elec.)
Ambient temperature (storage/transport)	-25 °C ... 60 °C (for a short time, no longer than 24 h, -60°C to +70°C)
Ambient temperature (assembly)	-5 °C ... 70 °C
Ambient temperature (actuation)	-5 °C ... 70 °C
Permissible humidity (operation)	20 % ... 90 %
Permissible humidity (storage/transport)	30 % ... 70 %

Mounting

Mounting type	NS 35/15

Drawings

Schematic diagram

PTPOWER

AGK 10-PTPOWER	**0,5 mm² ... 16 mm²**	**18 mm**
PTPOWER 35	**2,5 mm² ... 35 mm²**	**25 mm**
PTPOWER 50	**10 mm² ... 50 mm²**	**32 mm**
PTPOWER 95	**25 mm² ... 95 mm²**	**40 mm**
PTPOWER 185	**95 mm² ... 185 mm²**	**40 mm**

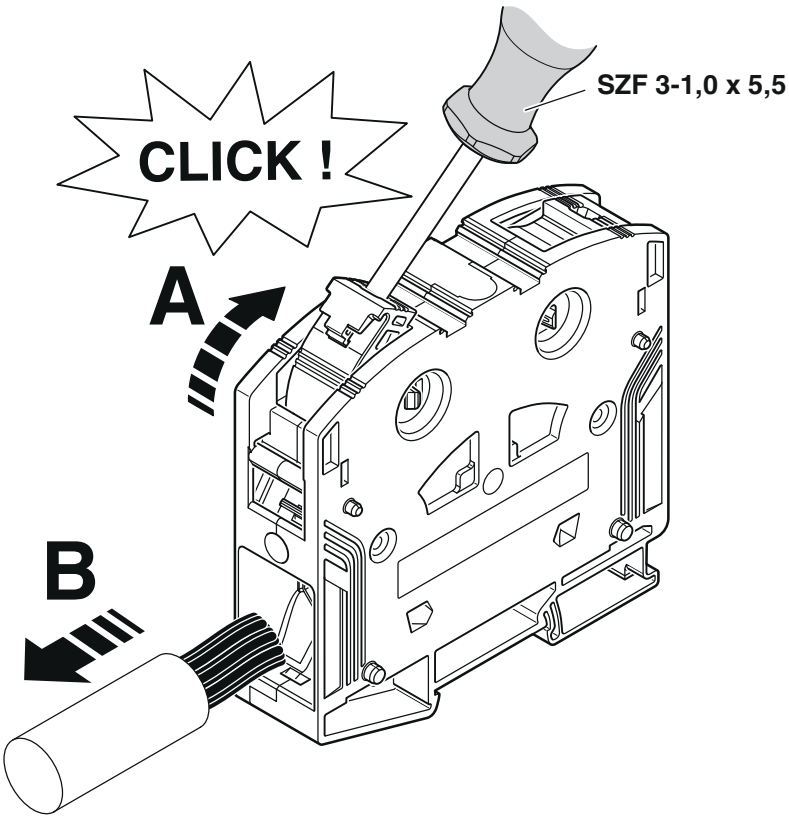

Circuit diagram

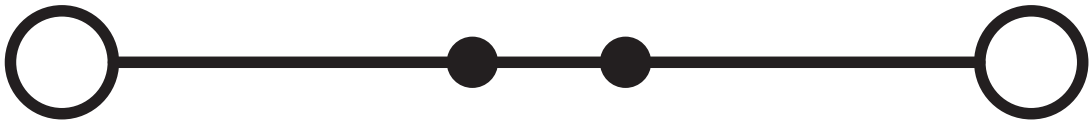

Approvals

To download certificates, visit the product detail page: https://www.phoenixcontact.com/us/products/3212095

CSA
Approval ID: 13631

EAC
Approval ID: RU C-DE.BL08.B.00644

DNV
Approval ID: TAE00000Z9

cULus Recognized
Approval ID: E60425

	Nominal voltage U_N	Nominal current I_N	Cross section AWG	Cross section mm^2
Use group C				
	1000 V	115 A	14 - 2	-
Use group E				
	1000 V	115 A	14 - 2	-

CSA
Approval ID: 13631

CCC
Approval ID: 2020322313000630

UKCA-EX
Approval ID: CML 22UKEX1227U

IECEx
Approval ID: IECExSEV14.0013U

	Nominal voltage U_N	Nominal current I_N	Cross section AWG	Cross section mm^2
Only rigid conductors	690 V	109 A	-	2.5 - 35
multi-stranded with ferrule	690 V	109 A	-	6 - 35

ATEX
Approval ID: SEV14ATEX0156U

	Nominal voltage U_N	Nominal current I_N	Cross section AWG	Cross section mm^2
Only rigid conductors	690 V	109 A	-	2.5 - 35
multi-stranded with ferrule	690 V	109 A	-	6 - 35

Classifications

ECLASS

ECLASS-11.0	27141120
ECLASS-13.0	27250101

ETIM

ETIM 9.0	EC000897

UNSPSC

UNSPSC 21.0	39121400

Environmental product compliance

EU RoHS

Fulfills EU RoHS substance requirements	Yes, No exemptions

China RoHS

Environment friendly use period (EFUP)	EFUP-E
	No hazardous substances above the limits

EU REACH SVHC

REACH candidate substance (CAS No.)	No substance above 0.1 wt%

Accessories

Note: Applying some accessories below might limit this product.

FBS 2-16 - Plug-in bridge

3005963

https://www.phoenixcontact.com/us/products/3005963

Plug-in bridge, pitch: 16 mm, number of positions: 2, length: 44 mm, color: red

Max. current carrying capacity: 101 A

RB PTPOWER 35-ST 16 - Reducing bridge

3032170

https://www.phoenixcontact.com/us/products/3032170

Reducing bridge, For bridging PTPOWER 35 to ST 16... or PT 16 N terminal blocks, pitch: 14.5 mm, number of positions: 2, length: 5 mm, color: red

Max. current carrying capacity: 90 A

RB PTPOWER 35-ST(2,5/4) - Reducing bridge

3030900

https://www.phoenixcontact.com/us/products/3030900

Reducing bridge, for bridging of PTPOWER 35 to ST or PT ..N terminal blocks with nominal cross section of 2.5 mm^2 and 4 mm^2, pitch: 10.8 mm, number of positions: 2, length: 5 mm, color: red

Max. current carrying capacity: 35 A

PAI-ST 35/1000MM - Test adapter

3029994

https://www.phoenixcontact.com/us/products/3029994

Test adapter, number of positions: 1, color: red

LPS-16/E - Service connector

3270620

https://www.phoenixcontact.com/us/products/3270620

Service connector, cross section: 0.14 mm^2- 4 mm^2, color: red

LPS-16 - Service connector

3270621

https://www.phoenixcontact.com/us/products/3270621

Service connector, cross section: 0.14 mm^2- 4 mm^2, color: red

LPO 35/E - Pick-off plug

3270542

https://www.phoenixcontact.com/us/products/3270542

Pick-off plug, nom. voltage: 800 V, nominal current: 24 A, number of positions: 1, connection method: Push-in connection, Rated cross section: 2.5 mm^2, cross section: 0.14 mm^2- 4 mm^2, color: gray

LPO 35 - Pick-off plug

3270543

https://www.phoenixcontact.com/us/products/3270543

Pick-off plug, nom. voltage: 800 V, nominal current: 24 A, number of positions: 1, connection method: Push-in connection, Rated cross section: 2.5 mm^2, cross section: 0.14 mm^2- 4 mm^2, color: gray

NS 35/15 PERF 2000MM - DIN rail perforated

1201730

https://www.phoenixcontact.com/us/products/1201730

DIN rail perforated, Pack of 25 (50 m), similar to EN 60715, material: Steel, galvanized, passivated with a thick layer, Standard profile, color: silver

NS 35/15 UNPERF 2000MM - DIN rail, unperforated

1201714

https://www.phoenixcontact.com/us/products/1201714

DIN rail, unperforated, Pack of 25 (50 m), similar to EN 60715, material: Steel, galvanized, passivated with a thick layer, Standard profile, color: silver

NS 35/15 WH PERF 2000MM - DIN rail perforated

0806602

https://www.phoenixcontact.com/us/products/0806602

DIN rail perforated, Pack of 25 (50 m), similar to EN 60715, material: Steel, Galvanized, white passivated, Standard profile, color: white

NS 35/15 WH UNPERF 2000MM-VPE 10 - DIN rail, unperforated

1204135

https://www.phoenixcontact.com/us/products/1204135

DIN rail, unperforated, Pack of 10 (20 m), similar to EN 60715, material: Steel, Galvanized, white passivated, Standard profile, color: silver

NS 35/15 AL UNPERF 2000MM - DIN rail, unperforated

1201756

https://www.phoenixcontact.com/us/products/1201756

DIN rail, unperforated, similar to EN 60715, material: Aluminum, uncoated, Standard profile, color: silver

NS 35/15 ZN PERF 2000MM - DIN rail perforated

1206599

https://www.phoenixcontact.com/us/products/1206599

DIN rail perforated, Pack of 25 (50 m), similar to EN 60715, material: Steel, galvanized, Standard profile, color: silver

NS 35/15 ZN UNPERF 2000MM - DIN rail, unperforated

1206586

https://www.phoenixcontact.com/us/products/1206586

DIN rail, unperforated, Pack of 25 (50 m), similar to EN 60715, material: Steel, galvanized, Standard profile, color: silver

NS 35/15 CU UNPERF 2000MM-VPE 10 - DIN rail, unperforated

1201895

https://www.phoenixcontact.com/us/products/1201895

DIN rail, unperforated, Pack of 10 (20 m), similar to EN 60715, material: Copper, uncoated, Standard profile, color: copper-colored

NS 35/15 CAP - End cap

1206573

https://www.phoenixcontact.com/us/products/1206573

DIN rail end piece, for DIN rail NS 35/15

TMT (EX9,5)R - Marker for terminal blocks

0828295

https://www.phoenixcontact.com/us/products/0828295

Marker for terminal blocks, Roll, white, unlabeled, can be labeled with: THERMOMARK E.300 (D)/600 (D), THERMOMARK ROLL 2.0, THERMOMARK ROLL, THERMOMARK ROLL X1, THERMOMARK ROLLMASTER 300/600, THERMOMARK X1.2, mounting type: snapped, snap into tall marker groove, for terminal block width: 30000 mm, lettering field size: 9.5 x 50000 mm, Number of individual labels: 1

US-TM 100 - Marker for terminal blocks

0829255

https://www.phoenixcontact.com/us/products/0829255

Marker for terminal blocks, Card, white, unlabeled, can be labeled with: BLUEMARK ID COLOR, BLUEMARK ID, THERMOMARK PRIME, THERMOMARK CARD 2.0, THERMOMARK CARD, mounting type: snapped, lettering field size: 104 x 9.8 mm, Number of individual labels: 13

ZBF10:UNBEDRUCKT - Zack Marker strip, flat

0809997

https://www.phoenixcontact.com/us/products/0809997

Zack Marker strip, flat, Strip, white, unlabeled, can be labeled with: CMS-P1-PLOTTER, PLOTMARK, mounting type: snapped, for terminal block width: 10 mm, lettering field size: 5.15 x 10 mm, Number of individual labels: 10

ZBF10 CUS - Zack Marker strip, flat

0825031

https://www.phoenixcontact.com/us/products/0825031

Zack Marker strip, flat, can be ordered: Strip, white, labeled according to customer specifications, mounting type: snap into flat marker groove, for terminal block width: 10 mm, lettering field size: 5.15 x 10 mm, Number of individual labels: 10

ZBF10,LGS:FORTL.ZAHLEN - Zack Marker strip, flat

0810009

https://www.phoenixcontact.com/us/products/0810009

Zack Marker strip, flat, Strip, white, labeled, printed horizontally: consecutive numbers 1 ... 10, 11 ... 20, etc. up to 91 ... 100, mounting type: snapped, for terminal block width: 10 mm, lettering field size: 5.15 x 10 mm, Number of individual labels: 10

ZBF10,QR:FORTL.ZAHLEN - Zack Marker strip, flat

0810025

https://www.phoenixcontact.com/us/products/0810025

Zack Marker strip, flat, Strip, white, labeled, Printed vertically: consecutive numbers 1 ... 10, 11 ... 20, etc. up to 91 ... 100, mounting type: snapped, for terminal block width: 10 mm, lettering field size: 5.15 x 10 mm, Number of individual labels: 10

UC-TMF 10 - Marker for terminal blocks

0818124

https://www.phoenixcontact.com/us/products/0818124

Marker for terminal blocks, Sheet, white, unlabeled, can be labeled with: BLUEMARK ID COLOR, BLUEMARK ID, BLUEMARK CLED, PLOTMARK, CMS-P1-PLOTTER, mounting type: snapped, for terminal block width: 10.2 mm, lettering field size: 9.6 x 5.1 mm, Number of individual labels: 48

UC-TMF 10 CUS - Marker for terminal blocks

0824662

https://www.phoenixcontact.com/us/products/0824662

Marker for terminal blocks, can be ordered: by sheet, white, labeled according to customer specifications, mounting type: snap into flat marker groove, for terminal block width: 10.2 mm, lettering field size: 9.6 x 5.1 mm, Number of individual labels: 48

UCT-TMF 10 - Marker for terminal blocks

0829204

https://www.phoenixcontact.com/us/products/0829204

Marker for terminal blocks, Sheet, white, unlabeled, can be labeled with: TOPMARK NEO, TOPMARK LASER, BLUEMARK ID COLOR, BLUEMARK ID, BLUEMARK CLED, THERMOMARK PRIME, THERMOMARK CARD 2.0, THERMOMARK CARD, mounting type: snapped, for terminal block width: 10.2 mm, lettering field size: 9.4 x 4.7 мм, Number of individual labels: 36

UCT-TMF 10 CUS - Marker for terminal blocks

0829679

https://www.phoenixcontact.com/us/products/0829679

Marker for terminal blocks, can be ordered: by sheet, white, labeled according to customer specifications, mounting type: snap into flat marker groove, for terminal block width: 10.2 mm, lettering field size: 9.4 x 4.7 мм, Number of individual labels: 36

ZB 10:UNBEDRUCKT - Zack marker strip

1053001

https://www.phoenixcontact.com/us/products/1053001

Zack marker strip, Strip, white, unlabeled, can be labeled with: PLOTMARK, CMS-P1-PLOTTER, mounting type: snapped, for terminal block width: 10.2 mm, lettering field size: 10.5 x 10.15 mm, Number of individual labels: 10

ZB 10 CUS - Zack marker strip

0824941

https://www.phoenixcontact.com/us/products/0824941

Zack marker strip, can be ordered: Strip, white, labeled according to customer specifications, mounting type: snap into tall marker groove, for terminal block width: 10.2 mm, lettering field size: 10,15 x 10,5 mm, Number of individual labels: 10

ZB10,LGS:FORTL.ZAHLEN - Zack marker strip

1053014

https://www.phoenixcontact.com/us/products/1053014

Zack marker strip, Strip, white, labeled, can be labeled with: CMS-P1-PLOTTER, printed horizontally: consecutive numbers 1 ... 10, 11 ... 20, etc. up to 91 ... 100, mounting type: snapped, for terminal block width: 10.2 mm, lettering field size: 10,15 x 10,5 mm, Number of individual labels: 10

ZB10,QR:FORTL.ZAHLEN - Zack marker strip

1053027

https://www.phoenixcontact.com/us/products/1053027

Zack marker strip, Strip, white, labeled, can be labeled with: CMS-P1-PLOTTER, Printed vertically: consecutive numbers 1 ... 10, 11 ... 20, etc. up to 91 ... 100, mounting type: snapped, for terminal block width: 10.2 mm, lettering field size: 10,15 x 10,5 mm, Number of individual labels: 10

ZB10,LGS:L1-N,PE - Marker for terminal blocks

1053412

https://www.phoenixcontact.com/us/products/1053412

Marker for terminal blocks, Strip, white, labeled, can be labeled with: CMS-P1-PLOTTER, horizontal: L1, L2, L3, N, PE, L1, L2, L3, N, PE, mounting type: snapped, for terminal block width: 10.2 mm, lettering field size: 10,15 x 10,5 mm, Number of individual labels: 10

ZB10,LGS:U-N - Marker for terminal blocks

1053438

https://www.phoenixcontact.com/us/products/1053438

Marker for terminal blocks, Strip, white, labeled, can be labeled with: CMS-P1-PLOTTER, horizontal: U, V, W, N, GND, U, V, W, N, GND, mounting type: snapped, for terminal block width: 10.2 mm, lettering field size: 10,15 x 10,5 mm, Number of individual labels: 10

UC-TM 10 - Marker for terminal blocks

0818069

https://www.phoenixcontact.com/us/products/0818069

Marker for terminal blocks, Sheet, white, unlabeled, can be labeled with: BLUEMARK ID COLOR, BLUEMARK ID, BLUEMARK CLED, PLOTMARK, CMS-P1-PLOTTER, mounting type: snapped, for terminal block width: 10.2 mm, lettering field size: 9.6 x 10.5 mm, Number of individual labels: 48

UC-TM 10 CUS - Marker for terminal blocks

0824605

https://www.phoenixcontact.com/us/products/0824605

Marker for terminal blocks, can be ordered: by sheet, white, labeled according to customer specifications, mounting type: snap into tall marker groove, for terminal block width: 10.2 mm, lettering field size: 9.6 x 10.5 mm, Number of individual labels: 48

UCT-TM 10 - Marker for terminal blocks

0829142

https://www.phoenixcontact.com/us/products/0829142

Marker for terminal blocks, Sheet, white, unlabeled, can be labeled with: TOPMARK NEO, TOPMARK LASER, BLUEMARK ID COLOR, BLUEMARK ID, BLUEMARK CLED, THERMOMARK PRIME, THERMOMARK CARD 2.0, THERMOMARK CARD, mounting type: snapped, for terminal block width: 10.2 mm, lettering field size: 8.9 x 9.6 mm, Number of individual labels: 36

UCT-TM 10 CUS - Marker for terminal blocks

0829623

https://www.phoenixcontact.com/us/products/0829623

Marker for terminal blocks, can be ordered: by sheet, white, labeled according to customer specifications, mounting type: snap into tall marker groove, for terminal block width: 10.2 mm, lettering field size: 8.9 x 9.6 mm, Number of individual labels: 36

SZF 3-1,0X5,5 - Screwdriver

1206612

https://www.phoenixcontact.com/us/products/1206612

Actuation tool, for ST terminal blocks, also suitable for use as a bladed screwdriver, size: 1.0 x 5.5 x 150 mm, 2-component grip, with non-slip grip

SZS 0,8X4,0 VDE - Screwdriver

1212508

https://www.phoenixcontact.com/us/products/1212508

Screwdriver, slot-headed, VDE insulated, size: 0.8 x 4.0 x 100 mm, 2-component grip, with non-slip grip

CRIMPFOX CENTRUS 6S - Crimping pliers

1213144

https://www.phoenixcontact.com/us/products/1213144

Crimping pliers, for uninsulated and insulated ferrules, DIN 46228 Part 1 and 4, from 0.14 mm^2 … 6 mm^2, also for TWIN ferrules up to 2 x 4 mm^2, automatic cross section adjustment, lateral insertion, equipped with fall protection

CRIMPFOX CENTRUS 10S - Crimping pliers

1213154

https://www.phoenixcontact.com/us/products/1213154

Crimping pliers, for uninsulated and insulated ferrules, DIN 46228 Part 1 and 4, from 0.14 mm^2 ... 10 mm^2, also for TWIN ferrules up to 2 x 4 mm^2, automatic cross section adjustment, lateral insertion, equipped with fall protection

CRIMPFOX CENTRUS 6H - Crimping pliers

1213146

https://www.phoenixcontact.com/us/products/1213146

Crimping pliers, for uninsulated and insulated ferrules, DIN 46228 Part 1 and 4, from 0.14 mm^2 … 6 mm^2, also for TWIN ferrules up to 2 x 4 mm^2, automatic cross section adjustment, lateral insertion, equipped with fall protection

CRIMPFOX CENTRUS 10H - Crimping pliers

1213156

https://www.phoenixcontact.com/us/products/1213156

Crimping pliers, for uninsulated and insulated ferrules, DIN 46228 Part 1 and 4, from 0.14 mm^2 ... 10 mm^2, also for TWIN ferrules up to 2 x 4 mm^2, automatic cross section adjustment, lateral insertion, equipped with fall protection

CRIMPFOX 10S - Crimping pliers

1212045

https://www.phoenixcontact.com/us/products/1212045

Crimping pliers, for ferrules without insulating collar according to DIN 46228 Part 1 and ferrules with insulating collar according to DIN 46228 Part 4, 0.14 mm^2 ... 10 mm^2, unlockable pressure lock, lateral entry

CRIMPFOX 6H - Crimping pliers

1212046

https://www.phoenixcontact.com/us/products/1212046

Crimping pliers, for ferrules without insulating collar according to DIN 46228 Part 1 and ferrules with insulating collar according to DIN 46228 Part 4, 0.14 mm^2 ... 6 mm^2, unlockable pressure lock, lateral entry

CRIMPFOX 2,5-M - Crimping pliers

1212719

https://www.phoenixcontact.com/us/products/1212719

Crimping pliers, for ferrules without insulating collar according to DIN 46228 Part 1 and ferrules with insulating collar according to DIN 46228 Part 4, 0.25 mm^2 ... 2.5 mm^2, lateral entry, trapezoidal crimp

CRIMPFOX 6-M - Crimping pliers

1212720

https://www.phoenixcontact.com/us/products/1212720

Crimping pliers, for ferrules without insulating collar according to DIN 46228 Part 1 and ferrules with insulating collar according to DIN 46228 Part 4, 0.25 mm^2 ... 6.0 mm^2, lateral entry, trapezoidal crimp

CRIMPFOX 6 - Crimping pliers

1212034

https://www.phoenixcontact.com/us/products/1212034

Crimping pliers, for ferrules without insulating collar according to DIN 46228 Part 1 and ferrules with insulating collar according to DIN 46228 Part 4, 0.25 mm^2 ... 6.0 mm^2, lateral entry, trapezoidal crimp

CRIMPFOX 6T - Crimping pliers

1212037

https://www.phoenixcontact.com/us/products/1212037

Crimping pliers, for ferrules without insulating collar according to DIN 46228 Part 1 and ferrules with insulating collar according to DIN 46228 Part 4, 0.25 mm^2 ... 6 mm^2, lateral entry, trapezoidal crimp

CRIMPFOX 6T-F - Crimping pliers

1212038

https://www.phoenixcontact.com/us/products/1212038

Crimping pliers, for ferrules without insulating collar according to DIN 46228 Part 1 and ferrules with insulating collar according to DIN 46228 Part 4, 0.25 mm^2 ... 6 mm^2, front entry, trapezoidal crimp

CRIMPFOX 6S-F - Crimping pliers

1212043

https://www.phoenixcontact.com/us/products/1212043

Crimping pliers, for ferrules without insulating collar according to DIN 46228 Part 1 and ferrules with insulating collar according to DIN 46228 Part 4, 0.5 mm^2 ... 6 mm^2, front entry, square crimp

CRIMPFOX 10 - Crimping pliers

1212721

https://www.phoenixcontact.com/us/products/1212721

Crimping pliers, for ferrules without insulating collar according to DIN 46228 Part 1 and ferrules with insulating collar according to DIN 46228 Part 4, 4 mm^2 ... 10 mm^2, lateral entry, trapezoidal crimp

CRIMPFOX 25R - Crimping pliers

1212039

https://www.phoenixcontact.com/us/products/1212039

Crimping pliers, for ferrules without insulating collar according to DIN 46228 Part 1 and ferrules with insulating collar according to DIN 46228 Part 4, 10 mm^2 ... 25 mm^2, lateral entry, WM crimp

CRIMPFOX 50R - Crimping pliers

1212041

https://www.phoenixcontact.com/us/products/1212041

Crimping pliers, for ferrules without insulating collar according to DIN 46228 Part 1 and ferrules with insulating collar according to DIN 46228 Part 4, 35 mm^2 ... 50 mm^2, lateral entry, WM crimp

CRIMPFOX-M - Crimping pliers

1212072

https://www.phoenixcontact.com/us/products/1212072

Basic pliers, for accommodating dies for a wide range of type of contacts

CEC PTPOWER 35/50 - Cover

1056086

https://www.phoenixcontact.com/us/products/1056086

Cover, yellow, labeled: Lightning flash, mounting type: plug in

PROJECT COMPLETE - Software

1050453

https://www.phoenixcontact.com/us/products/1050453

Intuitive planning and marking software for configuring terminal strips and for professional marking of marking materials for terminal blocks, conductors, cables, devices, and systems. The software is available for download

A 10 -25 - Ferrule

1090628

https://www.phoenixcontact.com/us/products/1090628

Ferrule, color: silver

A 16 -25 - Ferrule

1090632

https://www.phoenixcontact.com/us/products/1090632

Ferrule, color: silver

A 25 -25 - Ferrule

1090634

https://www.phoenixcontact.com/us/products/1090634

Ferrule, color: silver

AI 35 -25 RD - Ferrule

3200713

https://www.phoenixcontact.com/us/products/3200713

Ferrule, sleeve length: 25 mm, color: red

Phoenix Contact 2024 © - all rights reserved
https://www.phoenixcontact.com

Phoenix Contact USA
586 Fulling Mill Road
Middletown, PA 17057, United States
(+717) 944-1300
info@phoenixcon.com