Data sheet | Item number: 234-205

PCB terminal block; push-button; 0.5 mm²; Pin spacing 2.5 mm; 5-pole; CAGE CLAMP®; 0,50 mm²; gray

www.wago.com/234-205

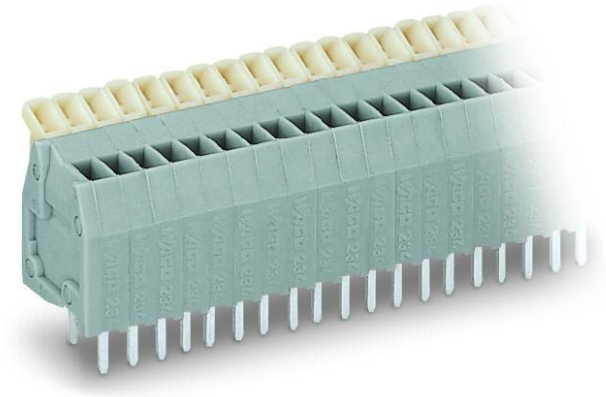

Picture differs from the item.

Color:

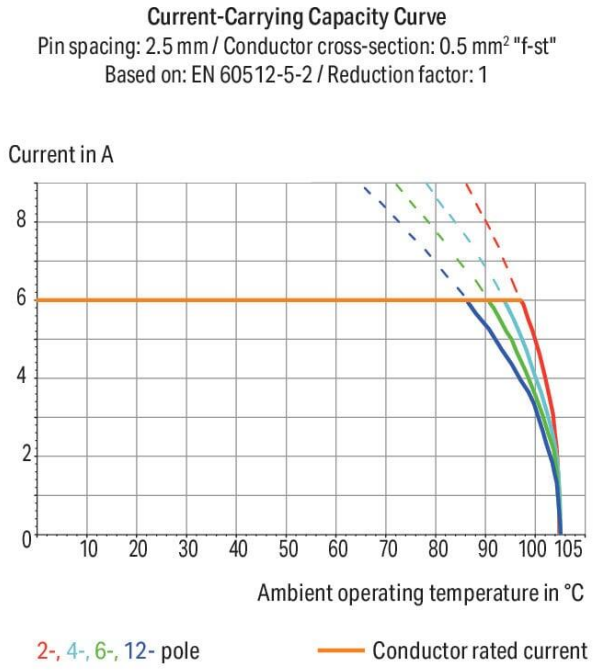

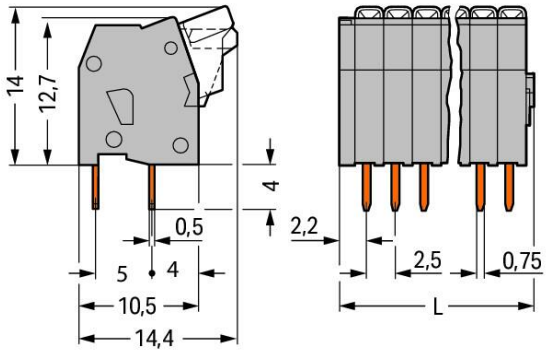

Dimensions in mm
L = (pole no. x pin spacing) + 2.2 mm

Subject to changes. Please also observe the further product documentation!

WAGO GmbH & Co. KG
Hansastr. 27
32423 Minden
Phone: +49571 887-0 | Fax: +49571 887-169
Email: info.de@wago.com | Web: www.wago.com

Do you have any questions about our products?
We are always happy to take your call at +49 (571) 887-44222.

Item description

- PCB terminal strips with push-buttons and CAGE CLAMP® connection
- Double solder pins for high mechanical stability on PCB
- Ideal for in-the-field wiring thanks to simplified push-button actuation
- Convenient, tool-free operation

Data
Notes

Variants:	Other pole numbers Other colors Mixed-color PCB connector strips Direct marking Other versions (or variants) can be requested from WAGO Sales or configured at https://configurator.wago.com/.

Electrical data

Ratings per IEC/EN

Ratings per	IEC/EN 60664-1
Nominal voltage (III/3)	63 V
Rated impulse voltage (III/3)	2.5 kV
Rated voltage (III/2)	160 V
Rated impulse voltage (III/2)	2.5 kV
Nominal voltage (II/2)	320 V
Rated surge voltage (II/2)	2.5 kV
Rated current	6 A
Legend (ratings)	(III / 2) ≙ Overvoltage category III / Pollution degree 2

Ratings per UL

Approvals per	UL 1059
Rated voltage UL (Use Group B)	150 V
Rated current UL (Use Group B)	4 A

Ratings per CSA

Approvals per	CSA
Rated voltage CSA (Use Group B)	150 V

Subject to changes. Please also observe the further product documentation!

WAGO GmbH & Co. KG
Hansastr. 27
32423 Minden
Phone: +49571 887-0 | Fax: +49571 887-169
Email: info.de@wago.com | Web: www.wago.com

Do you have any questions about our products?
We are always happy to take your call at +49 (571) 887-44222.

Rated current CSA (Use Group B)	4 A

Connection data

Connection points	5
Total number of potentials	5
Number of connection types	1
Number of levels	1

Connection 1

Connection technology	CAGE CLAMP®
Actuation type	Push-button
Solid conductor	0.08 … 0.5 mm² / 28 … 20 AWG
Fine-stranded conductor	0.08 … 0.5 mm² / 28 … 20 AWG
Fine-stranded conductor; with insulated ferrule	0.25 mm²
Fine-stranded conductor; with uninsulated ferrule	0.25 mm²
Strip length	5 … 6 mm / 0.2 … 0.24 inches
Conductor connection direction to PCB	90 °
Pole number	5

Physical data

Pin spacing	2.5 mm / 0.098 inches
Width	14.7 mm / 0.579 inches
Height	18 mm / 0.709 inches
Height from the surface	14 mm / 0.551 inches
Depth	14.4 mm / 0.567 inches
Solder pin length	4 mm
Solder pin dimensions	0.5 x 0.75 mm
Drilled hole diameter with tolerance	1.1 $^{(+0.1)}$ mm

PCB contact

PCB contact	THT
Solder pin arrangement	over the entire terminal strip (in-line)
Number of solder pins per potential	2

Subject to changes. Please also observe the further product documentation!

WAGO GmbH & Co. KG
Hansastr. 27
32423 Minden
Phone: +49571 887-0 | Fax: +49571 887-169
Email: info.de@wago.com | Web: www.wago.com

Do you have any questions about our products?
We are always happy to take your call at +49 (571) 887-44222.

Material data

Note (material data)	Information on material specifications can be found here
Color	gray
Material group	I
Insulation material	Polyamide (PA66)
Flammability class per UL94	V0
Clamping spring material	Chrome-nickel spring steel (CrNi)
Contact material	Electrolytic copper (E_{Cu})
Contact plating	Tin
Fire load	0.044 MJ
Weight	2.6 g

Environmental requirements

Limit temperature range	-60 … +105 °C

Commercial data

Product Group	4 (Printed Circuit Connectors)
eCl@ss 10.0	27-44-04-01
eCl@ss 9.0	27-44-04-01
ETIM 8.0	EC002643
ETIM 7.0	EC002643
ECCN	NO DATA
PU (SPU)	340 (85) pcs
Packaging type	box
Country of origin	CH
GTIN	4044918651516
Customs tariff number	85369010000

Environmental Product Compliance

RoHS Compliance Status	Compliant,No Exemption

Approvals / Certificates

General approvals

Subject to changes. Please also observe the further product documentation!

WAGO GmbH & Co. KG
Hansastr. 27
32423 Minden
Phone: +49571 887-0 | Fax: +49571 887-169
Email: info.de@wago.com | Web: www.wago.com

Do you have any questions about our products?
We are always happy to take your call at +49 (571) 887-44222.

Logo	Approval	Additional Approval Text	Certificate name
	CCA DEKRA Certification B.V.	EN 60998	NTR NL 6946
	CCA DEKRA Certification B.V.	EN 60998	2153951.01
	CCA DEKRA Certification B.V.	EN 60947-7-4	NTR NL 7787
	CCC CQC	GB/T 13140.1	CQC09003035378
	CSA DEKRA Certification B.V.	C22.2	1465035
	KEMA/KEUR DEKRA Certification B.V.	EN 60947-7-4	71-111042
	UL UL International Germany GmbH	UL 1059	E45172

Declarations of conformity and manufacturer's declarations

Logo	Approval	Additional Approval Text	Certificate name
	EU-Declaration of Conformity WAGO GmbH & Co. KG	-	-
	UK-Declaration of Conformity WAGO GmbH & Co. KG	-	-

Approvals for marine applications

	Certificate

Subject to changes. Please also observe the further product documentation!

WAGO GmbH & Co. KG
Hansastr. 27
32423 Minden
Phone: +49571 887-0 | Fax: +49571 887-169
Email: info.de@wago.com | Web: www.wago.com

Do you have any questions about our products?
We are always happy to take your call at +49 (571) 887-44222.

Logo	Approval	Additional Approval Text	name
	BV Bureau Veritas S.A.	IEC 60998	11915/D0 BV

Optional accessories

Marking accessories

Marking strip

	Item no.: 210-331/250-207 Marking strips; as a DIN A4 sheet; MARKED; 1-48 (100x); Height of marker strip: 2.3 mm/0.091 in; Strip length 182 mm; Horizontal marking; Self-adhesive; white	www.wago.com/210-331/250-207
	Item no.: 210-331/250-202 Marking strips; as a DIN A4 sheet; MARKED; 1-16 (400x); Height of marker strip: 2.3 mm/0.091 in; Strip length 182 mm; Horizontal marking; Self-adhesive; white	www.wago.com/210-331/250-202
	Item no.: 210-331/250-204 Marking strips; as a DIN A4 sheet; MARKED; 17-32 (400x); Height of marker strip: 2.3 mm/0.091 in; Strip length 182 mm; Horizontal marking; Self-adhesive; white	www.wago.com/210-331/250-204
	Item no.: 210-331/250-206 Marking strips; as a DIN A4 sheet; MARKED; 33-48 (400x); Height of marker strip: 2.3 mm/0.091 in; Strip length 182 mm; Horizontal marking; Self-adhesive; white	www.wago.com/210-331/250-206

Ferrule

Ferrule

	Item no.: 216-131 Ferrule; Sleeve for 0.25 mm² / AWG 24; uninsulated; electro-tin plated; silver-colored	www.wago.com/216-131
	Item no.: 216-151 Ferrule; Sleeve for 0.25 mm² / AWG 24; uninsulated; electro-tin plated	www.wago.com/216-151
	Item no.: 216-301 Ferrule; Sleeve for 0.25 mm² / AWG 24; insulated; electro-tin plated; yellow	www.wago.com/216-301
	Item no.: 216-321 Ferrule; Sleeve for 0.25 mm² / AWG 24; insulated; electro-tin plated; yellow	www.wago.com/216-321

Tool

Operating tool

	Item no.: 210-648 Operating tool; Blade: 2.5 x 0.4 mm; with a partially insulated shaft; angled; short	www.wago.com/210-648
	Item no.: 210-719 Operating tool; Blade: 2.5 x 0.4 mm; with a partially insulated shaft	www.wago.com/210-719

Subject to changes. Please also observe the further product documentation!

WAGO GmbH & Co. KG
Hansastr. 27
32423 Minden
Phone: +49571 887-0 | Fax: +49571 887-169
Email: info.de@wago.com | Web: www.wago.com

Do you have any questions about our products?
We are always happy to take your call at +49 (571) 887-44222.

Downloads

Documentation

Additional Information

Technical Section Technical explanations	2019 年4月3日	pdf 2.1 MB	Download

CAD/CAE-Data

CAD data

2D/3D Models 234-205	URL	Download

CAE data

EPLAN Data Portal 234-205	URL	Download
ZUKEN Portal 234-205	URL	Download

PCB Design

Symbol and Footprint via Ultra Librarian 234-205	URL	Download

CAx data for your PCB design, consisting of "schematic symbols and PCB footprints", allow easy integration of the WAGO component into your development environment.

Supported formats:

- Accel EDA 14 & 15
- Altair
- Altium 6 to current version
- Autodesk Fusion 360
- Cadence Allegro
- DesignSpark
- Eagle Libraries
- KiCad
- Mentor Graphics
- BoardStation
- Mentor Graphics Design Architect
- Mentor Graphics Design
- Expedition 99 and 2000

Subject to changes. Please also observe the further product documentation!

WAGO GmbH & Co. KG
Hansastr. 27
32423 Minden
Phone: +49571 887-0 | Fax: +49571 887-169
Email: info.de@wago.com | Web: www.wago.com

Do you have any questions about our products?
We are always happy to take your call at +49 (571) 887-44222.

- OrCAD 9.X PCB and Capture
- PADS PowerPCB 3, 3.5, 4.X, and 5.X
- PADS PowerPCB and PowerLogic 3.0
- PCAD 2000, 2001, 2002, 2004, and 2006
- Pulsonix 8.5 or newer
- STL
- 3D STEP
- TARGET 3001!
- View Logic ViewDraw
- Quadcept
- Zuken CadStar 3 and 4
- Zuken CR-5000 and CR-8000
- Zuken eCADSTAR 2020 and 2021Zuken CR-5000 and CR-8000

PCB Component Libraries (EDA), PCB CAD Library Ultra Librarian

Symbol and Footprint via SamacSys 234-205	URL	Download

CAx data for your PCB design, consisting of "schematic symbols and PCB footprints", allow easy integration of the WAGO component into your development environment.

Supported formats:

- 3D (stp)
- Altium
- CADSTAR
- Capture
- CircuitStudio
- CR-5000
- CR-8000
- DEHDL
- DesignSpark PCB
- DesignSpark PCB PRO
- DipTrace
- EAGLE
- Easy-PC
- EasyEDA
- eCADSTAR
- KiCad
- OrCAD_Allegro16

Subject to changes. Please also observe the further product documentation!

WAGO GmbH & Co. KG
Hansastr. 27
32423 Minden
Phone: +49571 887-0 | Fax: +49571 887-169
Email: info.de@wago.com | Web: www.wago.com

Do you have any questions about our products?
We are always happy to take your call at +49 (571) 887-44222.

- PADS
- Proteus
- Pulsonix
- Quadcept
- SOLIDWORKS PCB
- TARGET 3001!
- xDX Designer
- Xpedition

PCB Component Libraries (EDA), PCB CAD Library SamacSys Electronic Component Search Engine

Asset Administration Shell

Asset Administration Shell 234-205	URL	Download

Environmental Product Compliance

Compliance Search

Environmental Product Compliance 234-205 PCB terminal block; push-button; 0.5 mm²; Pin spacing 2.5 mm; 5-pole; CAGE CLAMP®; 0,50 mm²; gray	URL	Download

Installation Notes

Conductor termination

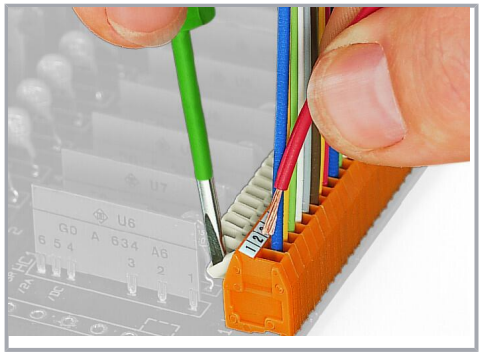

Inserting/removing a conductor.

Nominal cross-section: 0.5 mm² (20 AWG), 0.75 mm² (18 AWG) only in every other position

Marking

Subject to changes. Please also observe the further product documentation!

WAGO GmbH & Co. KG
Hansastr. 27
32423 Minden
Phone: +49571 887-0 | Fax: +49571 887-169
Email: info.de@wago.com | Web: www.wago.com

Do you have any questions about our products?
We are always happy to take your call at +49 (571) 887-44222.

Labeling via self-adhesive marking strips or factory direct marking.

Subject to changes. Please also observe the further product documentation!

WAGO GmbH & Co. KG
Hansastr. 27
32423 Minden
Phone: +49571 887-0 | Fax: +49571 887-169
Email: info.de@wago.com | Web: www.wago.com

Do you have any questions about our products?
We are always happy to take your call at +49 (571) 887-44222.