SIEMENS

Data sheet 3VA5190-4ED32-1AA0



circuit breaker 3VA5 UL frame 125 breaking capacity class S 25kA @ 480 V 3-pole, line protection TM210, FTFM, In=90A overload protection Ir=90A fixed short-circuit protection Ii=10 x In UL489 SB (naval), 50 deg. cel. nut keeper kit on both sides

Model	
product brand name	SENTRON
product designation	Molded-case circuit breaker
product designation / according to UL file	SEAM
design of the product	System protection
design of the load switch / according to UL 489 / Heating, Air Conditioning, and Refrigeration circuit breaker (HACR Type)	Yes
design of the load switch / according to UL 489 / High-Intensity-Discharge circuit breaker (HID Type)	No
design of the load switch / according to UL 489 / Switching Duty circuit breaker (SWD Type)	No
design of the overcurrent release	TM210
protection function of the overcurrent release	LI
number of poles	3
General technical data	
operating voltage / at AC / rated value	690 V
power loss [W] / maximum	21.4 W
power loss [W] / for rated value of the current / at AC / in hot operating state / per pole	7.13 W
mechanical service life (operating cycles) / typical	20 000
electrical endurance (operating cycles) / at AC-1 / at 380/415 V	8 000
electrical endurance (operating cycles) / at AC-1 / at 690 V	4 000
electrical endurance (operating cycles) / at 480 V	8 000
electrical endurance (operating cycles) / at 600 V	4 000
product feature / for neutral conductors / upgradable/retrofittable / short-circuit and overload proof	No
ground-fault monitoring version	without
product function	
● communication function	No
● other measurement function	No
Net Weight	0.951 kg
Current	
marking / according to UL 489 / 100%-rated breaker	No
operational current	
● at 40 °C	90 A
● at 45 °C	88 A
● at 50 °C	86 A
● at 55 °C	84 A
● at 60 °C	82 A
● at 65 °C	80 A
● at 70 °C	79 A

Subject to change without notice
© Copyright Siemens

Switching capacity according to IEC 60947	
switching capacity class of the circuit breaker	S
design of short-circuit protection	For switching power values in DC networks, see the 3VA molded case circuit breaker device manual; link to be found under Service & Support in the last chapter
Switching capacity according to UL 489	
current breaking capacity	
● at 240 V	65 kA
● at 480 V	25 kA
● at 600 Y/347 V	14 kA
Adjustable parameters	
adjustable response value setting current (Ir) / of the L-trip / with I2t characteristic	
● minimum	90 A
● maximum	90 A
adjustable response value delay time (tr) / for L-tripping / with I2t characteristic	
● minimum	1 s
● maximum	1 s
adjustable response value setting current (Ii) / for I-tripping	
● minimum	900 A
● maximum	900 A
adjustable absolute value setting current (InN) / for N-tripping	
● minimum	0 A
● maximum	0 A
adjustable current response value current / of the current-dependent overload release	90 ... 90 A
product function / grounding protection	No
Mechanical Design	
product component	
● undervoltage release	No
● voltage trigger	No
● trip indicator	No
height [in]	5.51 in
height	140 mm
width [in]	3 in
width	76.2 mm
depth [in]	3.01 in
depth	76.5 mm
Connections	
arrangement of electrical connectors / for main current circuit	Front connection
type of electrical connection / for main current circuit	nut keeper kit on both ends
type of connectable conductor cross-sections / for flat-bar terminal connection / minimum	12 x 1 mm
type of connectable conductor cross-sections / for flat-bar terminal connection / maximum	17 x 6.5 mm
Auxiliary circuit	
number of CO contacts / for auxiliary contacts	0
Accessories	
product extension / optional / motor drive	Yes
Environmental conditions	
protection class IP / on the front	IP40
ambient temperature	
● during operation / minimum	-25 °C
● during operation / maximum	70 °C
● during storage / minimum	-40 °C
● during storage / maximum	80 °C
Certificates	
certificate of suitability / as approval for NAVAL (no combat vessels) / supplement SB	Yes
General Product Approval	

Subject to change without notice
© Copyright Siemens

Confirmation

Miscellaneous

EMC	Test Certificates	Marine / Shipping	other
	Type Test Certific-ates/Test Report		Miscellaneous
			Confirmation

Further information

Siemens has decided to exit the Russian market (see here).
https://press.siemens.com/global/en/pressrelease/siemens-wind-down-russian-business
Siemens is working on the renewal of the current EAC certificates.
Please contact your local Siemens office on the status of validity of the EAC certification if you intend to import or offer to supply these products to an EAC relevant market (other than the sanctioned EAEU member states Russia or Belarus).
Information on the packaging
https://support.industry.siemens.com/cs/ww/en/view/109813875
Information- and Downloadcenter (Catalogs, Brochures,…)
http://www.siemens.com/lowvoltage/catalogs
Industry Mall (Online ordering system)
https://mall.industry.siemens.com/mall/en/en/Catalog/product?mlfb=3VA5190-4ED32-1AA0
Service&Support (Manuals, Certificates, Characteristics, FAQs,...)
https://support.industry.siemens.com/cs/ww/en/ps/3VA5190-4ED32-1AA0
Image database (product images, 2D dimension drawings, 3D models, device circuit diagrams, ...)
http://www.automation.siemens.com/bilddb/cax_en.aspx?mlfb=3VA5190-4ED32-1AA0
CAx-Online-Generator
http://www.siemens.com/cax
Tender specifications
http://www.siemens.com/specifications

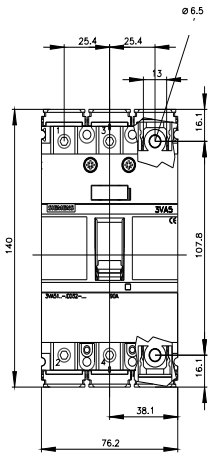

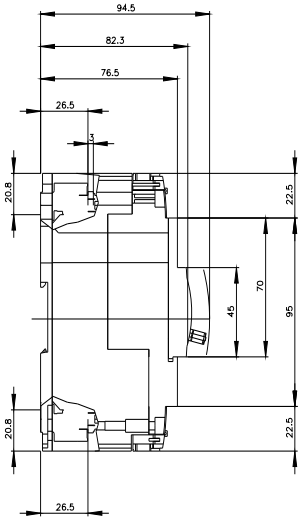

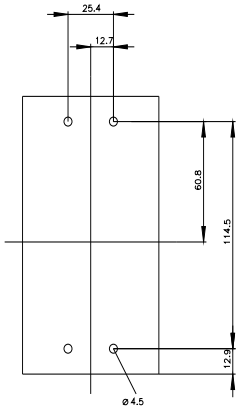

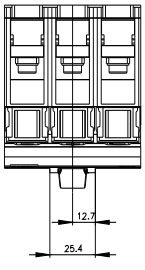

© Copyright Siemens

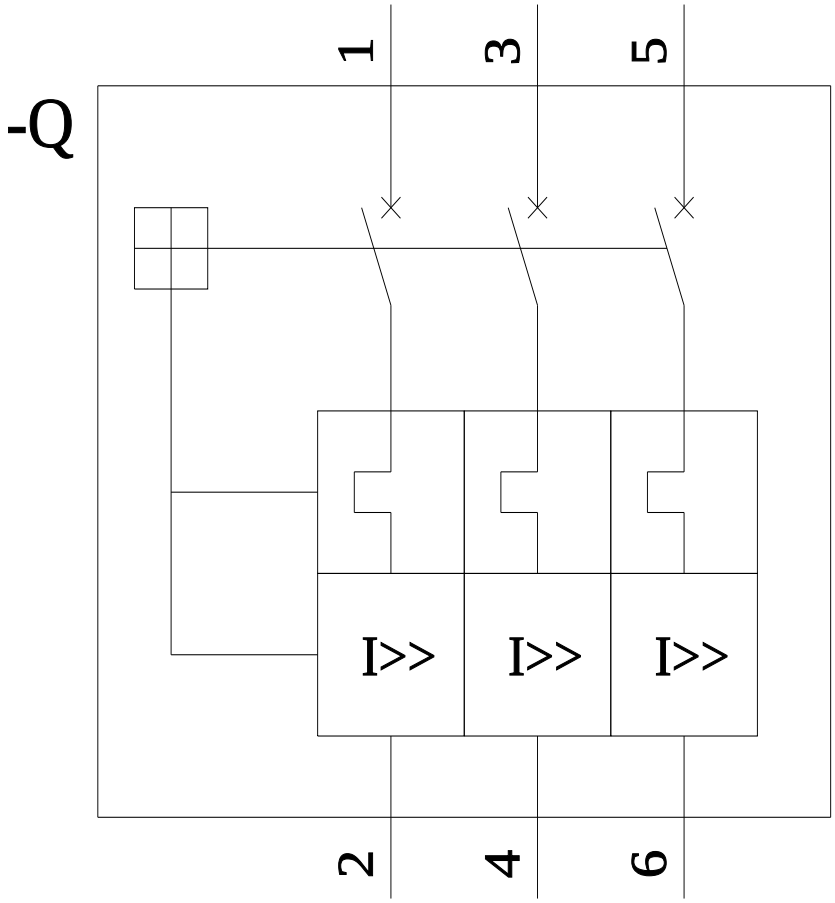

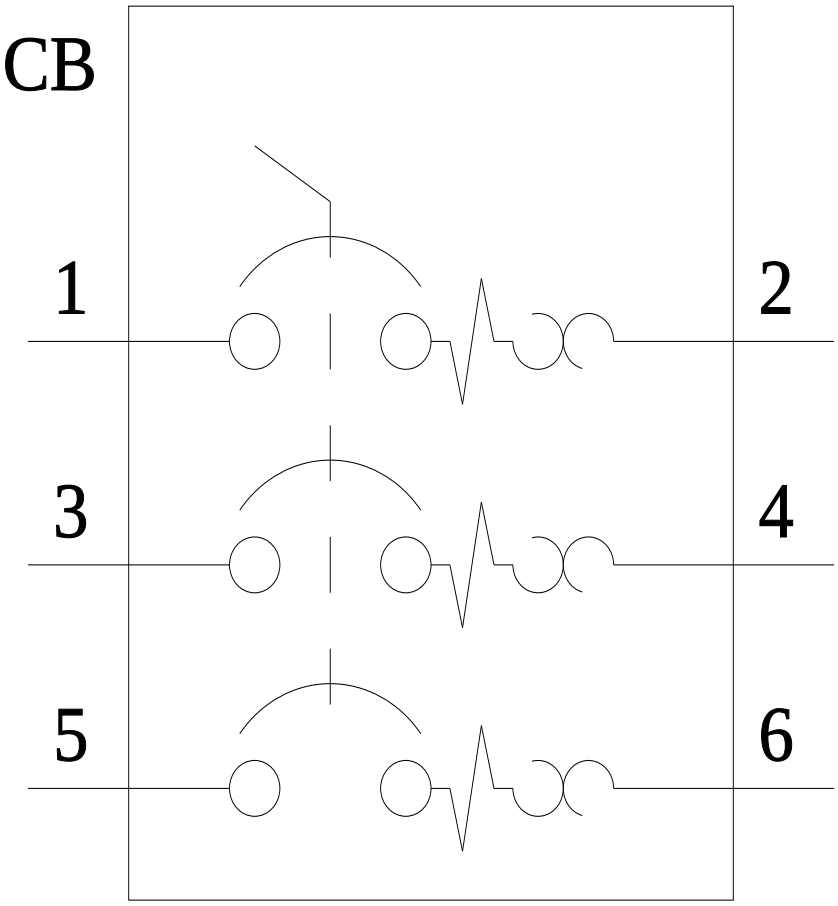

last modified: 7/15/2022

Subject to change without notice
© Copyright Siemens

Subject to change without notice
© Copyright Siemens