SEALING PLUG 48X35 RD - Closing cap

1425357

https://www.phoenixcontact.com/us/products/1425357

Please be informed that the data shown in this PDF document is generated from our online catalog. Please find the complete data in the user documentation. Our general terms of use for downloads are valid.



Closing cap, color: red

Commercial data

Item number	1425357
Packing unit	5 pc
Minimum order quantity	5 pc
Note	Made to order (non-returnable)
Sales key	BF68
Product key	BF7DZX
Catalog page	Page 707 (C-2-2019)
GTIN	4055626394626
Weight per piece (including packing)	24.57 g
Weight per piece (excluding packing)	22.22 g
Customs tariff number	39235090
Country of origin	DE

Technical data

Product properties

Product type	Sealing plugs

Dimensions

Dimensional drawing	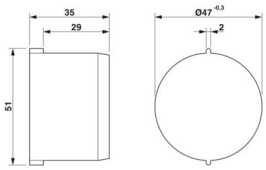
Length	35 mm
Diameter	47 mm

Material specifications

Material	PA

Cable/line

Halogen-free	yes

Environmental and real-life conditions

Ambient conditions

Ambient temperature (operation)	-60 °C ... 100 °C

Mounting

Assembly instructions	The head of the sealing plug must still be visible after mounting in the screw connection (see “after mounting” photo).

Drawings

Dimensional drawing

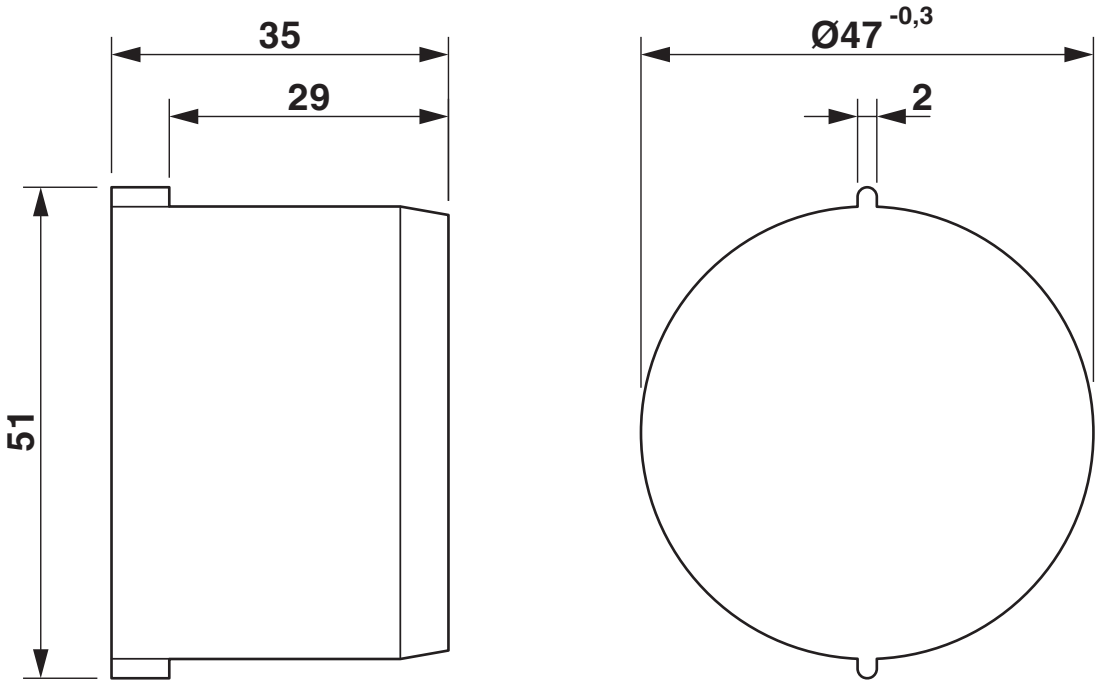

Dimensional drawing

Classifications

ECLASS

ECLASS-11.0	27144433
ECLASS-13.0	23111190

UNSPSC

UNSPSC 21.0	39121300

Environmental product compliance

EU RoHS

Fulfills EU RoHS substance requirements	Yes, No exemptions

China RoHS

Environment friendly use period (EFUP)	EFUP-E
	No hazardous substances above the limits

EU REACH SVHC

REACH candidate substance (CAS No.)	No substance above 0.1 wt%

Phoenix Contact 2024 © - all rights reserved
https://www.phoenixcontact.com

Phoenix Contact USA
586 Fulling Mill Road
Middletown, PA 17057, United States
(+717) 944-1300
info@phoenixcon.com