VAL-MS-T1/T2 335/12.5/3+1 - Lightning/surge arrester type 1/2

2800184

https://www.phoenixcontact.com/us/products/2800184

Please be informed that the data shown in this PDF document is generated from our online catalog. Please find the complete data in the user documentation. Our general terms of use for downloads are valid.



Universal varistor-based plug-in lightning/surge arrester for 3-phase power supply networks with separate N and PE (5-conductor system: L1, L2, L3, N, PE), for Lightning Protection Levels III and IV.

Your advantages

- Quality proven millions of times over in the widest range of applications
- Rapid installation with bridges, thanks to industry-standard overall width of 1 HP
- Easy testing and insulation measurement, thanks to pluggable protection modules
- Can be used in lightning protection level III and IV due to discharge capacity of 12.5 kA per position
- Vibration-resistant latching ensures the plug remains firmly in place

Commercial data

Item number	2800184
Packing unit	1 pc
Minimum order quantity	1 pc
Sales key	CL18
Product key	CL1151
Catalog page	Page 46 (C-4-2019)
GTIN	4046356518567
Weight per piece (including packing)	672.4 g
Weight per piece (excluding packing)	638 g
Customs tariff number	85363030
Country of origin	DE

Technical data

Product properties

Product type	Arrester combination
Product family	VALVETRAB MS
IEC test classification	I / II
	T1 / T2
EN type	T1 / T2
IEC power supply system	TT
	TN-S
Type	DIN rail module, two-section, divisible
Number of positions	4
Surge protection fault message	optical

Insulation characteristics

Overvoltage category	III
Pollution degree	2

Electrical properties

Nominal frequency f_N	50 Hz (60 Hz)

Connection data

Connection method	Screw connection
Screw thread	M5
Tightening torque	3 Nm (1.5 mm² ... 16 mm²)
	4.5 Nm (25 mm² ... 35 mm²)
Stripping length	16 mm
Conductor cross section flexible	1.5 mm² ... 25 mm²
Conductor cross section rigid	1.5 mm² ... 35 mm²
Conductor cross section AWG	15 ... 2
Connection method	Fork-type cable lug
Conductor cross section flexible	1.5 mm² ... 16 mm²

Dimensions

Dimensional drawing	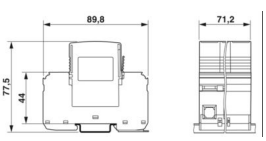
Width	71.2 mm
Height	89.8 mm
Depth	77.5 mm (incl. DIN rail 7.5 mm)
Horizontal pitch	4 Div.

Material specifications

Color	black (RAL 9005)
Flammability rating according to UL 94	V-0
CTI value of material	600
Insulating material	PA 6.6/PBT
Material group	I
Housing material	PA 6.6
	PBT

Mechanical properties

Mechanical data

Open side panel	No

Protective circuit

Mode of protection	L-N
	L-PE
	N-PE
Direction of action	3L-N & N-PE
Nominal voltage U_N	240/415 V AC (TN-S)
	240/415 V AC (TT)
Nominal frequency f_N	50 Hz (60 Hz)
Maximum continuous operating voltage U_C (L-N)	335 V AC
Maximum continuous operating voltage U_C (L-PE)	335 V AC
Maximum continuous operating voltage U_C (N-PE)	264 V AC
Rated load current I_L	80 A
Residual current I_{PE}	≤ 5 µA
Standby power consumption P_C	≤ 810.00 mVA
Nominal discharge current I_n (8/20) µs (L-N)	12.5 kA
Nominal discharge current I_n (8/20) µs (L-PE)	12.5 kA
Nominal discharge current I_n (8/20) µs (N-PE)	50 kA
Maximum discharge current I_{max} (8/20) µs	50 kA
Impulse discharge current (10/350) µs (L-N), charge	6.25 As
Impulse discharge current (10/350) µs (L-N), specific energy	39 kJ/Ω
Impulse discharge current (10/350) µs (L-N), peak current value I_{imp}	12.5 kA
Impulse discharge current (10/350) µs (L-PE), charge	6.25 As
Impulse discharge current (10/350) µs (L-PE), specific energy	39 kJ/Ω
Impulse discharge current (10/350) µs (L-PE), peak current value I_{imp}	12.5 kA
Impulse discharge current (10/350) µs (N-PE), charge	25 As
Impulse discharge current (10/350) µs (N-PE), specific energy	625 kJ/Ω

Impulse discharge current (10/350) µs (N-PE), peak current value I_{imp}	50 kA
Total discharge current I_{total} (8/20) µs	50 kA
Total discharge current I_{total} (10/350) µs	50 kA
Follow current interrupt rating I_{fi} (N-PE)	100 A
Short-circuit current rating I_{SCCR}	25 kA
Voltage protection level U_p (L-N)	≤ 1.2 kV
	≤ 1.6 kV (30 kA - 8/20 µs)
Voltage protection level U_p (L-PE)	≤ 2 kV
Voltage protection level U_p (N-PE)	≤ 1.7 kV
Residual voltage U_{res} (L-N)	≤ 1.2 kV (at I_n)
	≤ 1.1 kV (at 10 kA)
	≤ 1 kV (at 5 kA)
	≤ 0.9 kV (at 3 kA)
Residual voltage U_{res} (L-PE)	≤ 2 kV (at I_n)
	≤ 1.5 kV (at 10 kA)
	≤ 1.2 kV (at 5 kA)
	≤ 1.1 kV (at 3 kA)
Residual voltage U_{res} (N-PE)	≤ 0.6 kV (at I_n)
	≤ 0.5 kV (at 10 kA)
	≤ 0.5 kV (at 5 kA)
	≤ 0.4 kV (at 3 kA)
TOV behavior at U_T (L-N)	415 V AC (5 s / withstand mode)
	457 V AC (120 min / safe failure mode)
TOV behavior at U_T (N-PE)	1200 V AC (200 ms / withstand mode)
Response time t_A (L-N)	≤ 25 ns
Response time t_A (L-PE)	≤ 100 ns
Response time t_A (N-PE)	≤ 100 ns
Max. backup fuse with V-type through wiring	80 A (gG - 16 mm²)
Max. backup fuse with branch wiring	160 A (gG)

Additional technical data

Maximum discharge current I_{max} (8/20) µs	65 kA

Environmental and real-life conditions

Ambient conditions

Degree of protection	IP20 (only when all terminal points are used)
Ambient temperature (operation)	-40 °C ... 80 °C
Ambient temperature (storage/transport)	-40 °C ... 80 °C
Altitude	≤ 2000 m (amsl)
Permissible humidity (operation)	5 % ... 95 %
Shock (operation)	30g (Half-sine / 11 ms / 3x ±X, ±Y, ±Z)
Vibration (operation)	7.5g (10 ... 500 Hz / 2.5 h / X, Y, Z)

Approvals

UL specifications

Maximum continuous operating voltage MCOV (L-L)	670 V AC
Maximum continuous operating voltage MCOV (L-N)	335 V AC
Maximum continuous operating voltage MCOV (L-G)	335 V AC
Maximum continuous operating voltage MCOV (N-G)	264 V AC
Nominal discharge current I_n (L-L)	20 kA
Nominal discharge current I_n (L-N)	20 kA
Nominal discharge current I_n (L-G)	20 kA
Nominal discharge current I_n (N-G)	20 kA
Mode of protection	L-L
	L-N
	L-G
	N-G
Nominal voltage	415/240 V AC
Power distribution system	Wye
Nominal frequency	50/60 Hz
Measured limiting voltage MLV (L-L)	3570 V
Measured limiting voltage MLV (L-N)	2630 V
Measured limiting voltage MLV (L-G)	3600 V
Measured limiting voltage MLV (N-G)	2600 V
SPD Type	4CA

UL connection data

Tightening torque	30 lb_f-in.
Conductor cross section AWG	14 ... 2

Standards and regulations

Standards/specifications	IEC 61643-11
Note	2011
Standards/specifications	EN 61643-11
Note	2012

Mounting

Mounting type	DIN rail: 35 mm

Drawings

Dimensional drawing

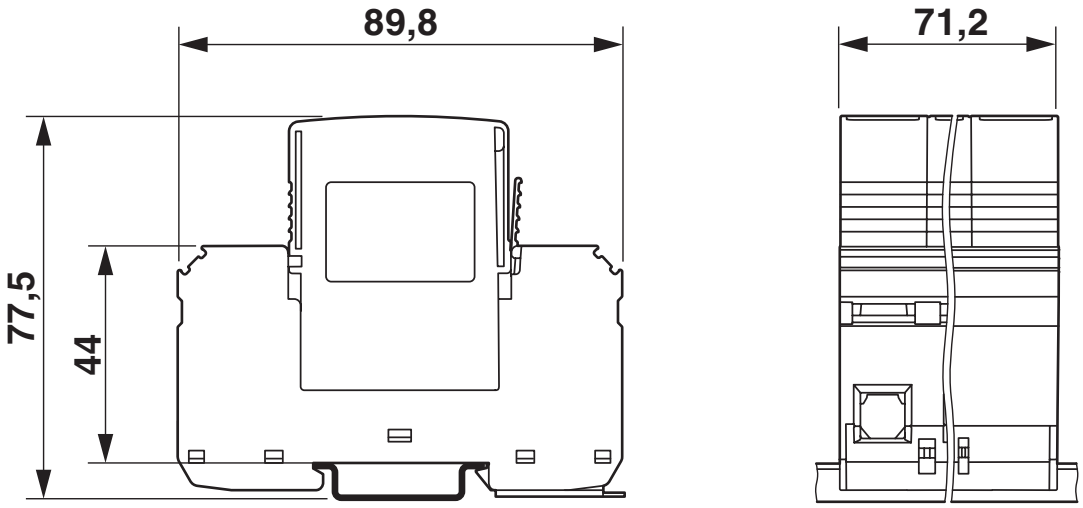

Circuit diagram

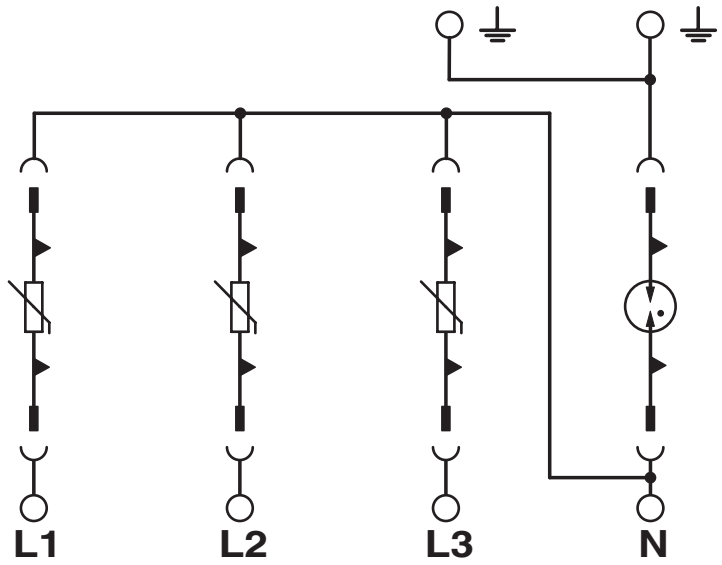

Approvals

To download certificates, visit the product detail page: https://www.phoenixcontact.com/us/products/2800184

cUL Recognized
Approval ID: FILE E 330181

UL Recognized
Approval ID: FILE E 330181

IECEE CB Scheme
Approval ID: AT 2584

EAC
Approval ID: RU C-DE.*09.B.00169

CCA
Approval ID: NTR-AT 1906

KEMA-KEUR
Approval ID: 2162496-01

DNV GL
Approval ID: TAE00001N9

ÖVE
Approval ID: 18583-009-09

UAE-RoHS
Approval ID: 23-10-88705

cULus Recognized

Classifications

ECLASS

ECLASS-11.0	27130802
ECLASS-13.0	27171201

ETIM

ETIM 9.0	EC000381

UNSPSC

UNSPSC 21.0	39121600

Environmental product compliance

EU RoHS

Fulfills EU RoHS substance requirements	Yes, No exemptions

China RoHS

Environment friendly use period (EFUP)	EFUP-E
	No hazardous substances above the limits

EU REACH SVHC

REACH candidate substance (CAS No.)	No substance above 0.1 wt%

Accessories

MPB 18/1-10/1.0.0 - Wiring bridge

2830443

https://www.phoenixcontact.com/us/products/2830443



Wiring bridge for modules with connecting pitch 17.5 mm, 1-phase, 10 pitches with contact sequence 1-0-0

MPB 18/4- 8 - Wiring bridge

2809283

https://www.phoenixcontact.com/us/products/2809283



Wiring bridge for modules with connecting pitch 17.5 mm, 4-phase, 8-pos.

MPB 18/3- 6 - Wiring bridge

2809241

https://www.phoenixcontact.com/us/products/2809241

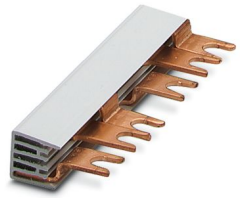

Wiring bridge for modules with connecting pitch 17.5 mm, 3-phase, 6-pos.

MPB 18/1-57 - Wiring bridge

2809238

https://www.phoenixcontact.com/us/products/2809238



Wiring bridge for modules with connecting pitch 17.5 mm, 1-phase, 57-pos.

MPB 18/1-12 - Wiring bridge

2748593

https://www.phoenixcontact.com/us/products/2748593



Wiring bridge for modules with connecting pitch 17.5 mm, 1-phase, 12-pos.

MPB 18/1- 9 - Wiring bridge

2748580

https://www.phoenixcontact.com/us/products/2748580



Wiring bridge for modules with connecting pitch 17.5 mm, 1-phase, 9-pos.

MPB 18/1- 8 - Wiring bridge

2748577

https://www.phoenixcontact.com/us/products/2748577



Wiring bridge for modules with connecting pitch 17.5 mm, 1-phase, 8-pos.

MPB 18/1- 6 - Wiring bridge

2748564

https://www.phoenixcontact.com/us/products/2748564



Wiring bridge for modules with connecting pitch 17.5 mm, 1-phase, 6-pos.

MPB 18/1- 4 - Wiring bridge

2809225

https://www.phoenixcontact.com/us/products/2809225



Wiring bridge for modules with connecting pitch 17.5 mm, 1-phase, 4-pos.

MPB 18/1- 3 - Wiring bridge

2809212

https://www.phoenixcontact.com/us/products/2809212



Wiring bridge for modules with connecting pitch 17.5 mm, 1-phase, 3-pos.

MPB 18/1- 2 - Wiring bridge

2809209

https://www.phoenixcontact.com/us/products/2809209



Wiring bridge for modules with connecting pitch 17.5 mm, 1-phase, 2-pos.

ZBN 18,LGS:ERDE - Marker for terminal blocks

2749589

https://www.phoenixcontact.com/us/products/2749589



Marker for terminal blocks, Strip, white, labeled, horizontal: Grounding symbol, mounting type: snapped, for terminal block width: 18 mm, lettering field size: 18 x 5 mm, Number of individual labels: 5

ZBN 18,LGS:L1-N,ERDE - Marker for terminal blocks

2749576

https://www.phoenixcontact.com/us/products/2749576



Marker for terminal blocks, Strip, white, labeled, horizontal: L1, L2, L3, N, GND, mounting type: snapped, for terminal block width: 18 mm, lettering field size: 18 x 5 mm, Number of individual labels: 5

ZBN 18:UNBEDRUCKT - Zack marker strip

2809128

https://www.phoenixcontact.com/us/products/2809128



Zack marker strip, Strip, white, unlabeled, can be labeled with: CMS-P1-PLOTTER, PLOTMARK, mounting type: snapped, for terminal block width: 18 mm, lettering field size: 18 x 5 mm, Number of individual labels: 5

DK-BIC-35 - Feed-through terminal block

2749880

https://www.phoenixcontact.com/us/products/2749880



Feed-through terminal block for VAL and FLT applications

ZBN 18 CUS - Zack marker strip

0825059

https://www.phoenixcontact.com/us/products/0825059



Zack marker strip, can be ordered: Strip, white, labeled according to customer specifications, mounting type: snap into tall marker groove, for terminal block width: 18 mm, lettering field size: 18 x 5 mm, Number of individual labels: 5

B-STIFT - Marker pen

1051993

https://www.phoenixcontact.com/us/products/1051993



Marker pen, for manual labeling of unprinted Zack strips, smear-proof and waterproof, line thickness 0.5 mm

SZK PZ2 VDE - Screwdriver

1206463

https://www.phoenixcontact.com/us/products/1206463



Screwdriver, PZ crosshead, VDE insulated, size: PZ 2 x 100 mm, 2-component grip, with non-slip grip

SZS 0,4X2,5 VDE - Screwdriver

1205037

https://www.phoenixcontact.com/us/products/1205037



Screwdriver, slot-headed, VDE insulated, size: 0.4 x 2.5 x 80 mm, 2-component grip, with non-slip grip

VAL-MS-T1/T2 335/12.5 ST - Type 1/2 surge protection plug

2800190

https://www.phoenixcontact.com/us/products/2800190



L-N replacement plug for VAL-MS-T1/T2 335/12.5 plug-in lighting/surge arrester.

VAL-MS-T1/T2 335/12.5/3+1 - Lightning/surge arrester type 1/2

2800184

https://www.phoenixcontact.com/us/products/2800184

F-MS-T1/T2 50 ST - Type 1/2 surge protection plug

2800191

https://www.phoenixcontact.com/us/products/2800191



N-PE replacement plug for VAL-MS-T1/T2 335/12.5 plug-in lighting/surge arrester.

Phoenix Contact 2024 © - all rights reserved
https://www.phoenixcontact.com

Phoenix Contact USA
586 Fulling Mill Road
Middletown, PA 17057, United States
(+717) 944-1300
info@phoenixcon.com