QR/P6 SERIES

QR/P6 SERIES RECTANGULAR MINIATURE MULTI-CONTACT RACK/PANEL CRIMP CONNECTOR

General

The QR/P6 Series are miniaturized versions of the QR/P and QR/P1 series. Rectangular multi-contact rack and panel connectors for plug-in connection.

Available in 6, 12, 16, and 24 contacts for highly efficient and reliable crimp termination.

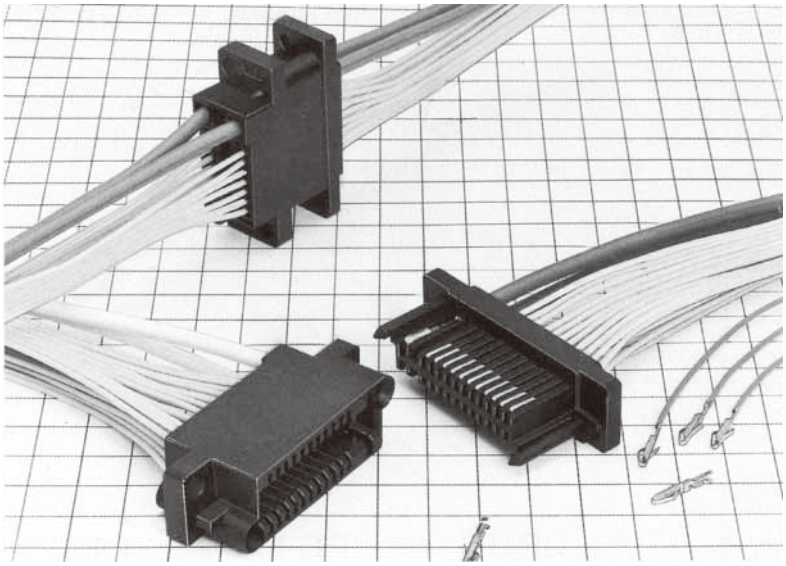

Features

(1) Offers smooth insertion/extraction and stable contact pressure through point-blade contact, and has ample allowance for the deviations in contact length specific to plug-in connection.
(2) Miniaturized by separating power contacts from signal contacts.
(3) Signal contacts in the housing are located in pitches of 2.54mm. The opposed contacts at one end of the connector are spaced 6.9mm so that they can withstand high voltage. Can be used for power supplies. Uses flame-retardant insulator (UL94-0).
(4) Miniaturized using guide pins integral with the insulator.
(5) Ensures smooth insertion and extraction, and designed to be fixed with stepped screws on a panel or rack.
(6) The female housing is designed to allow the contact part of the female terminal to be below the mating surface, meeting the Finger Test Requirements (complying with UL 1950)
(7) The connectors of the series have passed UL, CSA and TÜV standard.

Application

PPC, Transmission/Reception equipment, Data Communication, equipment, Vending machines, Measuring Instruments, Automation equipment, Switch-boards.

Aug.1.2025 Copyright 2025 HIROSE ELECTRIC CO., LTD. All Rights Reserved.

Main Specification

General ratings of QR/P6		
Contact Resistance	Power terminal	10mΩ or less at DC1A
	Signal terminal	15.mΩ or less at DC1A
Insulation Resistance	5000MΩ or less at DC 500V	
Withstand Voltage (for 1 min.)	Power unit	AC 1000V
	Signal unit	AC 500V
Rated current	Power terminal	10A
	Signal terminal	1A
Rated voltage	AC 120V	

Main materials		
Insulator	PBT resin	Black
Terminal	Phosphor bronze	Selective Gold plating with nickel underplating

＊UL94V-0

QR/P6 ratings approved by safety standards					
Safety standard			UL	CSA	TÜV
Operating temperature range			−10～+60℃		
Rated voltage	Power supply unit		AC 250V		AC250V
	Signal unit				AC125V
Rated current	AWG#14		10A	10A	10A
	AWG#16			8A	
	AWG#18		5A	5A	5A
	AWG#20		3A	3A	2.5A
	AWG#22				1A
	AWG #24	Power supply	3A	3A	1A
		Signal unit	1A	2A	
	AWG#26		1A	1A	1A
	AWG#28				——

Ordering Information

▲ Connector Unit

QR / P6 — 12 P — C — (21)

(1) (2)(3) (4) (11)

▲ Contact

QR / P1 — PC 1 A — 1 1 1

(1) (5)(6)(7) (8)(9)(10)

(1) Series name
(2) No.of contacts (6, 12, 16, 24)
(3) Shape of insulator mating part
P: Insulator male case
S: Insulator female case
(4) Type of termination
C: Crimp termination
(5) Male/ Female
PC: Male crimp terminal
SC: Female crimp terminal
(6) Type
1: Power terminal
2: Signal terminal
(7) Crimp barrel size
A: For thin wires
B: For thick wires
(8) Shape
1: Loose contact
2: Chain contact
(9) Applicable wire
1: Power terminal AWG # 18 - # 24
Signal terminal AWG # 24 - # 28
2: Power terminal AWG # 14 - # 16
(10) Surface terminal
1: Selective gold plating with nickel underplating
(11) Specifications meeting UL, CSA TÜV requirements

Aug.1.2025 Copyright 2025 HIROSE ELECTRIC CO., LTD. All Rights Reserved.

Aug.1.2025 Copyright 2025 HIROSE ELECTRIC CO., LTD. All Rights Reserved.

Housing

Male Housing



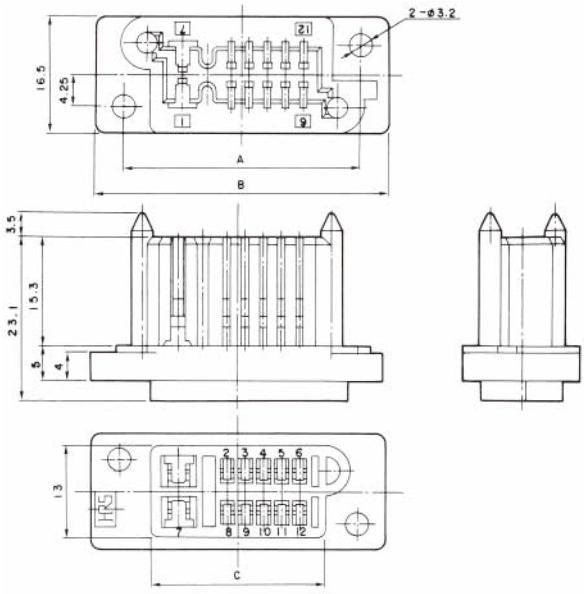

Unit: mm

HRS No.	No. of Pin	Part No.	A	B	C	RoHS
CL0221-0162-0-21	6	QR/P6- 6P-C(21)	24.67	32.67	15.87	○
CL0221-0163-2-21	12	QR/P6-12P-C(21)	33.47	41.47	24.67	
CL0221-0207-6-21	16	QR/P6-16P-C(21)	38.55	46.55	29.75	
CL0221-0209-1-21	24	QR/P6-24P-C(21)	48.71	56.71	39.91	

Famale housing

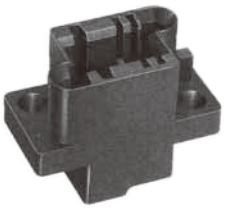

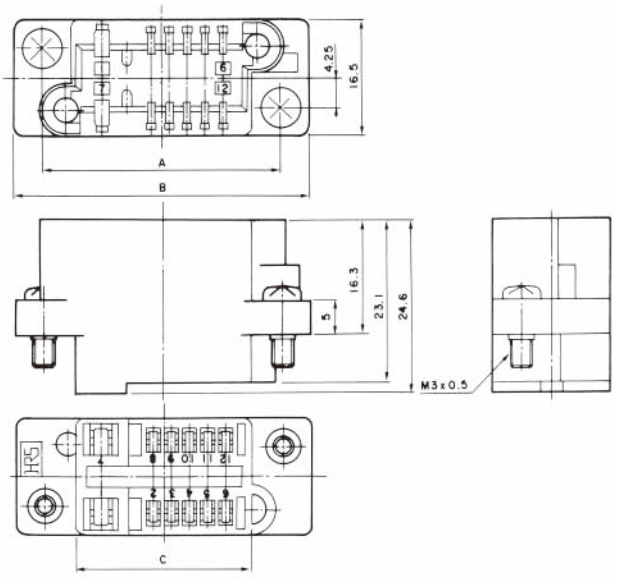

Unit: mm

HRS No.	No. of Pin	Part No.	A	B	C	RoHS
CL0221-0161-7-21	6	QR/P6- 6S-C(21)	24.67	32.67	15.87	○
CL0221-0164-5-21	12	QR/P6-12S-C(21)	33.47	41.47	24.67	
CL0221-0208-9-21	16	QR/P6-16S-C(21)	38.55	46.55	29.75	
CL0221-0210-0-21	24	QR/P6-24S-C(21)	48.71	56.71	39.91	

Note: Determine the combinations with the panel so that the mating clearance between the P side and S side is 1.5mm.

Contact

Male power terminal

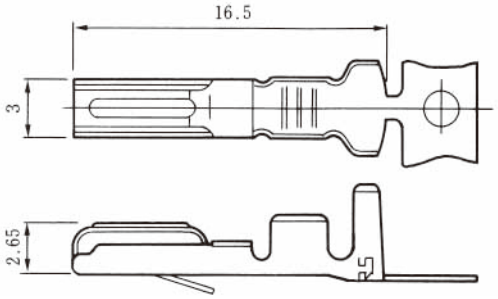

Selective gold plated with nickel underplating

Applicable Wire	HRS No.	Part No.	Type	Packing	RoHS
UL1015 AWG#14～16	CL0221-0114-7-12	QR/P1-PC1B-121(12)	Loose contact	100pin	○
	CL0221-0118-8-12	QR/P1-PC1B-221(12)	Chain contact	3,000pin	
UL1007 AWG#18～24	CL0221-0102-8-12	QR/P1-PC1A-111(12)	Loose contact	100pin	
	CL0221-0106-9-12	QR/P1-PC1A-211(12)	Chain contact	5,000pin	

Female power terminal

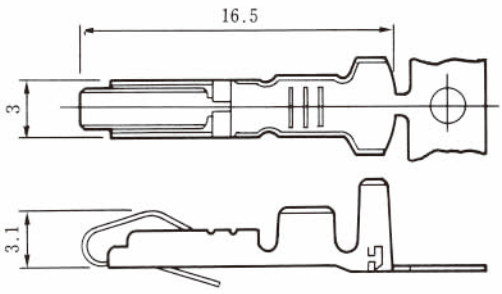

Selective gold plated with nickel underplating

Applicable Wire	HRS No.	Part No.	Type	Packing	RoHS
UL1015 AWG#14～16	CL0221-0116-2-12	QR/P1-SC1B-121(12)	Loose contact	100pin	○
	CL0221-0120-0-12	QR/P1-SC1B-221(12)	Chain contact	3,000pin	
UL1007 AWG#18～24	CL0221-0104-3-12	QR/P1-SC1A-111(12)	Loose contact	100pin	
	CL0221-0108-4-12	QR/P1-SC1A-211(12)	Chain contact	5,000pin	

Contact

Male signal terminal

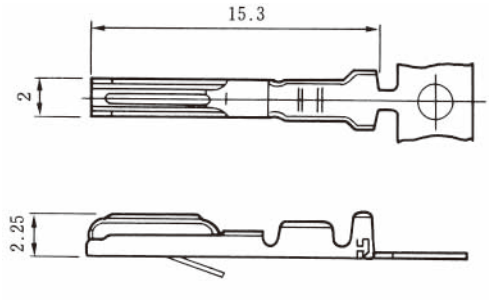

Selective gold plated with nickel underplating

Applicable Wire	HRS No.	Part No.	Type	Packing	RoHS
UL1007 AWG#24～28	CL0221-0103-0-12	QR/P1-PC2A-111 (12)	Loose	100pin	○
	CL0221-0107-1-12	QR/P1-PC2A-211 (12)	Chain	5,000pin	

Female signal terminal

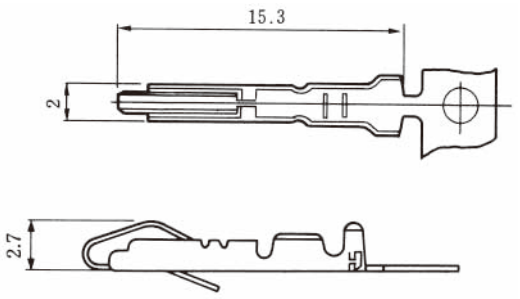

Selective gold plated with nickel underplating

Applicable Wire	HRS No.	Part No.	Type	Packing	RoHS
UL1007 AWG#24～28	CL0221-0105-6-12	QR/P1-SC2A-111 (12)	Loose	100pin	○
	CL0221-0109-7-12	QR/P1-SC2A-211 (12)	Chain	5,000pin	

Panel Mounting Dimensions (for Cases with P Insulation)

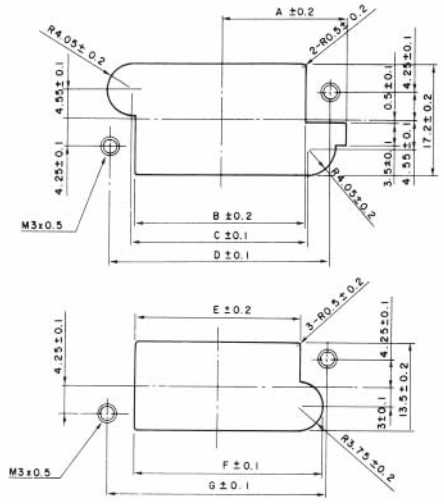

Mounting on panel outside

Unit: mm

No. of pin		8 Pin	12 Pin	16 Pin	24 Pin
Mounting on panel inside	A	14.87	19.27	21.85	26.95
	B	17.17	25.97	31.18	41.34
	C	18.17	26.97	32.05	42.21
	D	24.67	33.47	38.55	48.71
Mounting on panel outside	E	16.37	25.17	30.25	40.41
	F	19.87	28.67	33.75	43.91
	G	24.67	33.47	38.55	48.71

Applicable Tools



Hand crimping tool



Automatic crimping machine
CM-105
CL0901-0005-4-00

Type	HRS No.	Part No.	Applicator terminay
Hand Crimp Tool	CL0250-0020-0-00	TC-QR/P1-PC1B	QR/P1-PC1B-121
	CL0250-0015-0-00	TC-QR/P1-PC1A	QR/P1-PC1A-111
	CL0250-0022-6-00	TC-QR/P1-SC1B	QR/P1-SC1B-121
	CL0250-0017-6-00	TC-QR/P1-SC1A	QR/P1-SC1A-111
	CL0250-0016-3-00	TC-QR/P1-PC2A	QR/P1-PC2A-111
	CL0250-0018-9-00	TC-QR/P1-SC2A	QR/P1-SC2A-111
Auto Crimp Machine Applicator	CL0901-2529-6-00	AP105-QR/P1-1B-2	QR/P1-PC1B-221 QR/P1-SC1B-221
	CL0901-2527-0-00	AP105-QR/P1-1A-1	QR/P1-PC1A-211 QR/P1-SC1A-211
	CL0901-2528-3-00	AP105-QR/P1-2A-1	QR/P1-PC2A-211 QR/P1-SC2A-211
Hand Tool	CL0250-0242-2-00	TC-QR/P6-21	

Aug.1.2025 Copyright 2025 HIROSE ELECTRIC CO., LTD. All Rights Reserved.

Contacts for thick wire Contact Configuration

Male Housing (Viewed from Wiring Side)

■: indicates a contact hole for thick wire

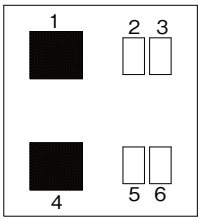

QR/P6-6P-C(21)

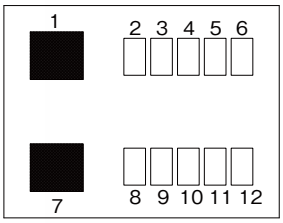

QR/P6-12P-C(21)

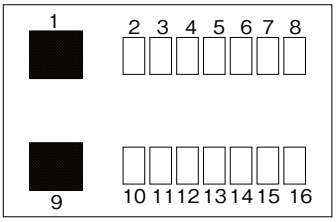

QR/P6-16P-C(21)

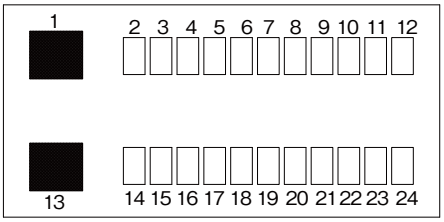

QR/P6-24P-C(21)

Aug.1.2025 Copyright 2025 HIROSE ELECTRIC CO., LTD. All Rights Reserved.