Data sheet

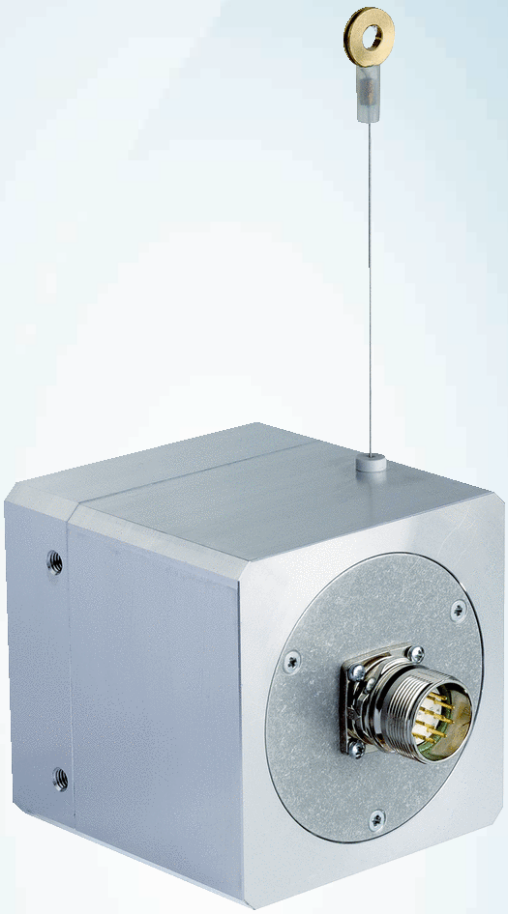

BKS09-ATBM0220

Compact

WIRE DRAW ENCODERS

SICK
Sensor Intelligence.

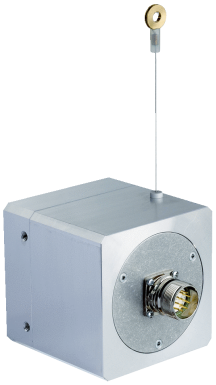

Ordering information

Type	part no.
BKS09-ATBM0220	1035240

Other models and accessories ➜ www.sick.com/Compact

Detailed technical data

Performance

Measurement range	0 m ... 2 m
Encoder	Absolute encoders
Number of steps per revolution	3,060
Repeatability	≤ 0.15 mm
Linearity	≤ ± 0.7 mm

Interfaces

Communication interface	SSI

Electrical data

Connection type	Male connector, M23, 12-pin, radial
Supply voltage	12 V ... 30 V
MTTFd: mean time to dangerous failure	150 years (EN ISO 13849) [1]

[1] This product is a standard product and does not constitute a safety component as defined in the Machinery Directive. Calculation based on nominal load of components, average ambient temperature 40 °C, frequency of use 8760 h/a. All electronic failures are considered hazardous. For more information, see document no. 8015532.

Mechanical data

Weight	1.5 kg
Measuring wire material	Highly flexible stranded steel (PA 12 sheathed)
Measuring wire diameter	0.6 mm
Housing material, wire draw mechanism	Aluminum
Spring return force	5 N ... 6 N [1]
Length of wire pulled out per revolution	153 mm

[1] These values were measred at an ambient temperature of 25 °C. There may be variations at other temperatures.

[2] A cycle consists of the wire being pulled out and drawn in.

[3] The service life depends on the type of load. This is influenced by environmental conditions, the installation location, the measuring range in use, the traversing speed, and acceleration.

Life of wire draw mechanism	Typ. 800,000 cycles [2) 3)]
Wire acceleration	≤ 20 m/s²
Operating speed	3.5 m/s

[1)] These values were measred at an ambient temperature of 25 °C. There may be variations at other temperatures.

[2)] A cycle consists of the wire being pulled out and drawn in.

[3)] The service life depends on the type of load. This is influenced by environmental conditions, the installation location, the measuring range in use, the traversing speed, and acceleration.

Ambient data

EMC	According to EN 61000-6-2 and EN 61000-6-3
Enclosure rating	IP52, Note required mounting position (IEC 60529)
Operating temperature range	–10 °C ... +70 °C

Certificates

EU declaration of conformity	✓
UK declaration of conformity	✓
ACMA declaration of conformity	✓
China-RoHS	✓
cULus certificate	✓
Information according to Art. 3 of Data Act (Regulation EU 2023/2854)	✓

Classifications

ECLASS 5.0	27270590
ECLASS 5.1.4	27270590
ECLASS 6.0	27270590
ECLASS 6.2	27270590
ECLASS 7.0	27270590
ECLASS 8.0	27270590
ECLASS 8.1	27270590
ECLASS 9.0	27270590
ECLASS 10.0	27270613
ECLASS 11.0	27270503
ECLASS 12.0	27270503
ETIM 5.0	EC001486
ETIM 6.0	EC001486
ETIM 7.0	EC001486
ETIM 8.0	EC001486
UNSPSC 16.0901	41112113

Dimensional drawing

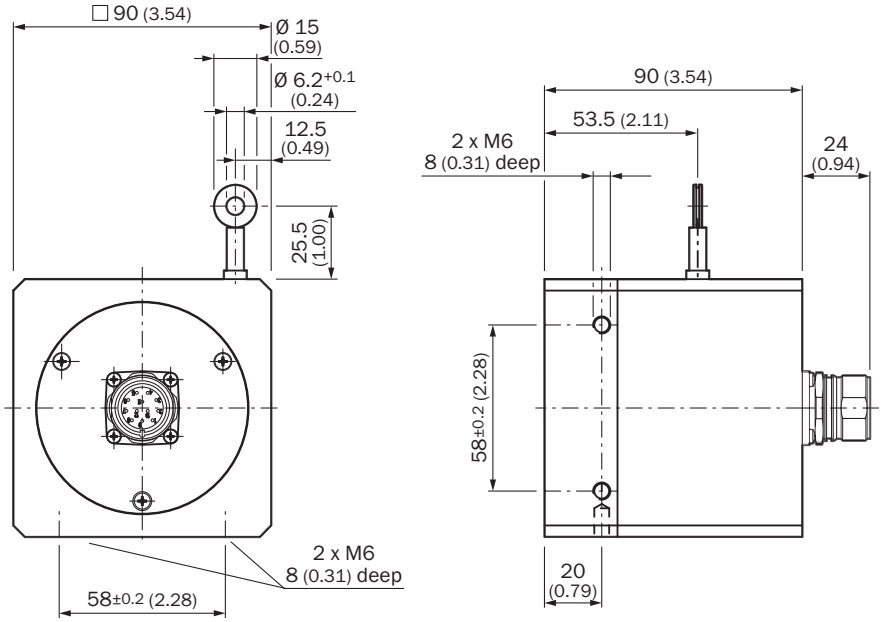

Dimensions in mm (inch)

Recommended accessories

Other models and accessories ➜ www.sick.com/Compact

	Brief description	Type	part no.
connectors and cables			
	• **Connection type head A:** Flying leads • **Connection type head B:** Flying leads • **Signal type:** SSI, Incremental • **Items supplied:** By the meter • **Cable:** 11-wire, PUR • **Description:** SSI, shielded, Incremental	LTG-2411-MW	6027530
	• **Connection type head A:** Flying leads • **Connection type head B:** Flying leads • **Signal type:** SSI, Incremental • **Items supplied:** By the meter • **Cable:** 12-wire, PUR, halogen-free • **Description:** SSI, shielded, Incremental	LTG-2512-MW	6027531
	• **Connection type head A:** Flying leads • **Connection type head B:** Flying leads • **Signal type:** SSI, TTL, HTL, Incremental • **Items supplied:** By the meter • **Cable:** 12-wire, UV and saltwater-resistant, PUR, halogen-free • **Description:** SSI, shielded, TTL, HTL, Incremental	LTG-2612-MW	6028516
	• **Connection type head A:** Female connector, M23, 12-pin, straight • **Connection type head B:** Flying leads • **Signal type:** SSI, RS-422, TTL, HTL • **Cable:** 1.5 m, 12-wire, PUR, halogen-free • **Description:** SSI, shieldedRS-422TTLHTL	DOL-2312-G1M5MA1	2029200
	• **Connection type head A:** Female connector, M23, 12-pin, straight • **Connection type head B:** Flying leads • **Signal type:** SSI, RS-422, TTL, HTL • **Cable:** 3 m, 12-wire, PUR, halogen-free • **Description:** SSI, shieldedRS-422TTLHTL	DOL-2312-G03MMA1	2029201
	• **Connection type head A:** Female connector, M23, 12-pin, straight • **Connection type head B:** Flying leads • **Signal type:** SSI, RS-422, TTL, HTL • **Cable:** 5 m, 12-wire, PUR, halogen-free • **Description:** SSI, shieldedRS-422TTLHTL	DOL-2312-G05MMA1	2029202
	• **Connection type head A:** Female connector, M23, 12-pin, straight • **Connection type head B:** Flying leads • **Signal type:** SSI, RS-422, TTL, HTL • **Cable:** 10 m, 12-wire, PUR, halogen-free • **Description:** SSI, shieldedRS-422TTLHTL	DOL-2312-G10MMA1	2029203
	• **Connection type head A:** Female connector, M23, 12-pin, straight • **Connection type head B:** Flying leads • **Signal type:** SSI, RS-422 • **Cable:** 20 m, 12-wire, PUR, halogen-free • **Description:** SSI, shieldedRS-422	DOL-2312-G20MMA1	2029204
	• **Connection type head A:** Female connector, M23, 12-pin, straight • **Connection type head B:** Flying leads • **Signal type:** SSI, RS-422 • **Cable:** 30 m, 12-wire, PUR, halogen-free • **Description:** SSI, shieldedRS-422	DOL-2312-G30MMA1	2029205
	• **Connection type head A:** Female connector, M23, 12-pin, straight • **Connection type head B:** Flying leads • **Signal type:** SSI • **Cable:** 2 m, 11-wire, PUR • **Description:** SSI, shielded	DOL-2312-G02MLA5	2030680
	• **Connection type head A:** Female connector, M23, 12-pin, straight • **Connection type head B:** Flying leads • **Signal type:** SSI • **Cable:** 7 m, 11-wire, PUR • **Description:** SSI, shielded	DOL-2312-G07MLA5	2030683
	• **Connection type head A:** Female connector, M23, 12-pin, straight • **Connection type head B:** Flying leads • **Signal type:** SSI • **Cable:** 10 m, 11-wire, PUR	DOL-2312-G10MLA5	2030686

	Brief description	Type	part no.
	• **Description:** SSI, shielded		
	• **Connection type head A:** Female connector, M23, 12-pin, straight • **Connection type head B:** Flying leads • **Signal type:** SSI • **Cable:** 15 m, 11-wire, PUR • **Description:** SSI, shielded	DOL-2312-G15MLA5	2030690
	• **Connection type head A:** Female connector, M23, 12-pin, straight • **Connection type head B:** Flying leads • **Signal type:** SSI • **Cable:** 20 m, 11-wire, PUR • **Description:** SSI, shielded	DOL-2312-G20MLA5	2030693
	• **Connection type head A:** Female connector, M23, 12-pin, straight • **Connection type head B:** Flying leads • **Signal type:** SSI • **Cable:** 25 m, 11-wire, PUR • **Description:** SSI, shielded	DOL-2312-G25MLA5	2030697
	• **Connection type head A:** Female connector, M23, 12-pin, straight • **Connection type head B:** Flying leads • **Signal type:** SSI • **Cable:** 30 m, 11-wire, PUR • **Description:** SSI, shielded	DOL-2312-G30MLA5	2030700
	• **Connection type head A:** Female connector, M23, 12-pin, straight • **Connection type head B:** Flying leads • **Signal type:** SSI, RS-422, TTL, HTL • **Cable:** 5 m, 12-wire, PUR, halogen-free • **Description:** SSI, shielded, RS-422, TTL, HTL	DOL-2312-G05MHA1	2059786

SICK AT A GLANCE

SICK is one of the leading manufacturers of intelligent sensors and sensor solutions for industrial applications. A unique range of products and services creates the perfect basis for controlling processes securely and efficiently, protecting individuals from accidents and preventing damage to the environment.

We have extensive experience in a wide range of industries and understand their processes and requirements. With intelligent sensors, we can deliver exactly what our customers need. In application centers in Europe, Asia and North America, system solutions are tested and optimized in accordance with customer specifications. All this makes us a reliable supplier and development partner.

Comprehensive services complete our offering: SICK LifeTime Services provide support throughout the machine life cycle and ensure safety and productivity.

For us, that is “Sensor Intelligence.”

WORLDWIDE PRESENCE:

Contacts and other locations –www.sick.com