THIS DRAWING IS UNPUBLISHED. RELEASED FOR PUBLICATION -
© COPYRIGHT 19 ALL RIGHTS RESERVED.

LOC	DIST
1	-

REVISIONS

P	LTR	DESCRIPTION	DATE	DWN	APVD
	C2	NEW PN 9-284406-1 ADDED	29MAY2011	DMK	RRP
	C3	REVISED AS PER ECR-13-019554	24DEC2013	MKD	RRP
	C4	REVISED AS PER ECR-14-008454	06JUN2014	MKD	RRP
	C5	ECR-23-192331	21NOV2023	PC	TD

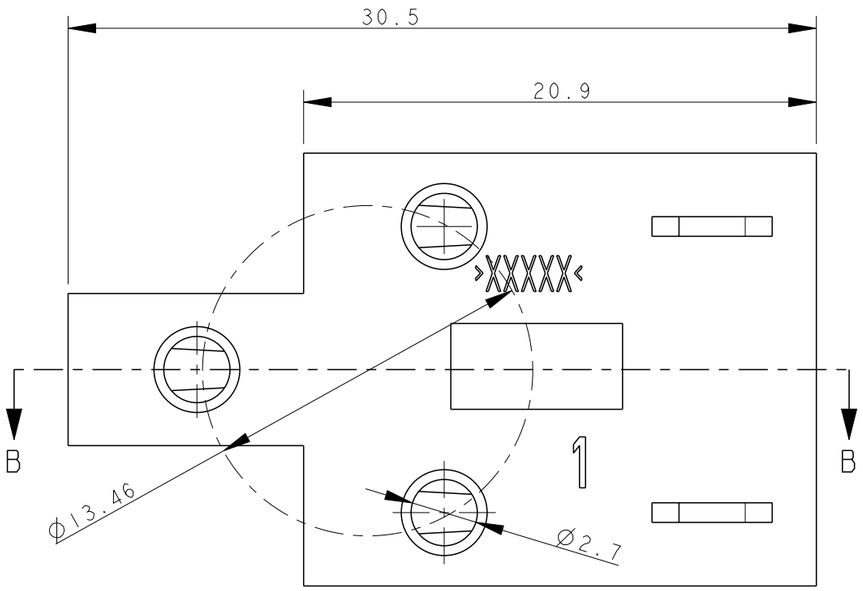

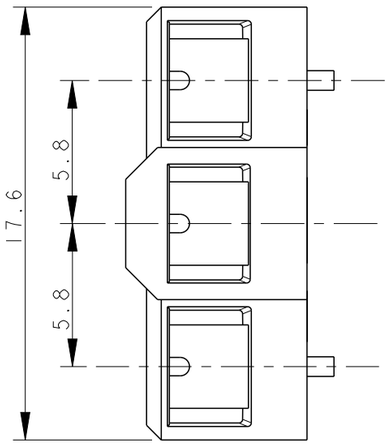

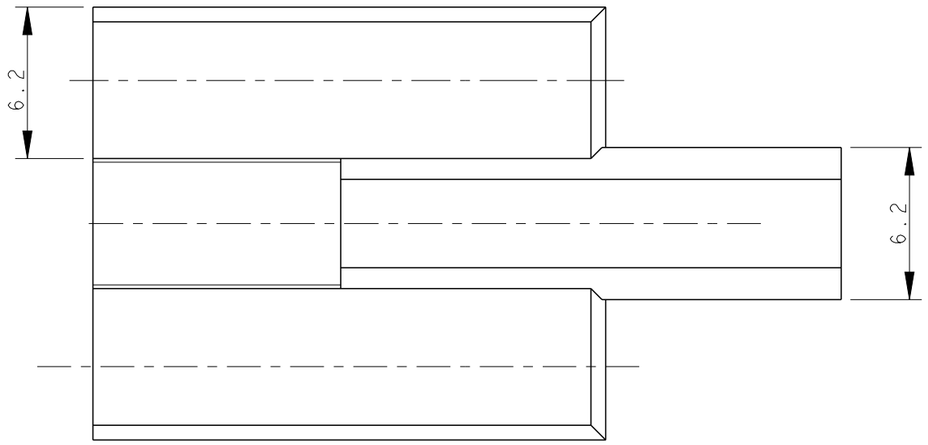

SECTION B-B
(SEZIONE B-B)

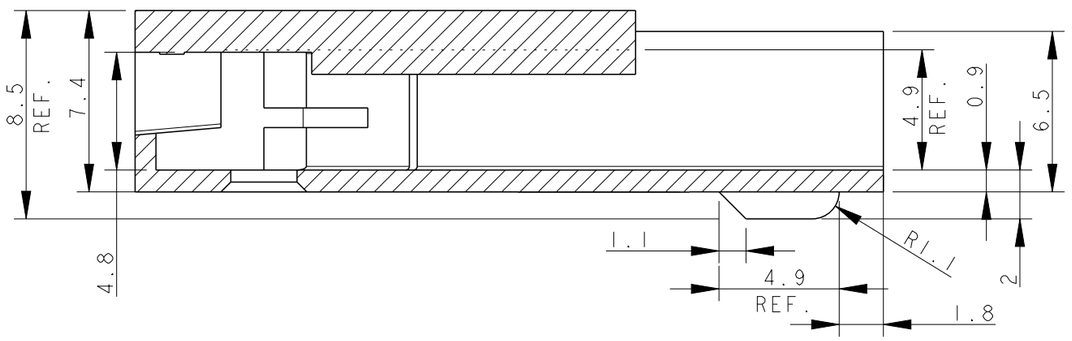

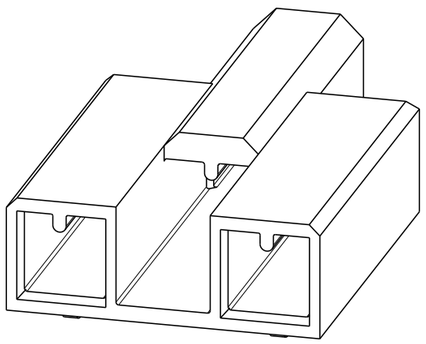

SCALE 3:1
(SCALA 3:1)

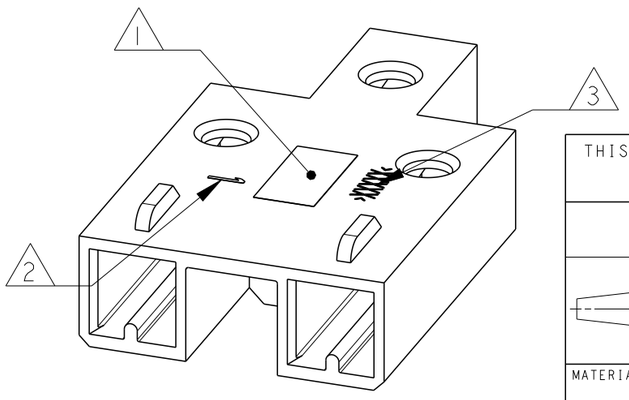

SCALE 3:1
(SCALA 3:1)

1. LOCATION FOR TE LOGO
2. MOULD CAVITY ID. CODE
3. MATERIAL ID. CODE
4. HOUSING AS SHOWN IS SUITABLE FOR CONTACT P/N 284633-1
5. HOUSING AS SHOWN IS SUITABLE FOR CONTACT P/N 2178453-1
6. MATERIAL PA6 15%GF, GWT(Glow Wire Test) 750° C WITHOUT FLAME ACCORDING TO IEC-60695-2-11.
7. PRELIMINARY PART- NOT YET RELEASED FOR PRODUCTION

COLOUR (COLORE)	MATERIAL (MATERIALE)	PART NO
NATURAL	PBT GLASSFIBRE FILLED	284406-3 5
NATURAL	PBT GLASSFIBRE FILLED	284406-2 7
NATURAL	PA6 GF15% 6	9-284406-1 7
NATURAL	PBT 30% CARICATO VETRO (PBT GLASSFIBRE FILLED)	284406-1 4

THIS DRAWING IS A CONTROLLED DOCUMENT.

DIMENSIONS: mm

TOLERANCES UNLESS OTHERWISE SPECIFIED:

0 PLC	± 0.5
1 PLC	± 0.3
2 PLC	± 0.15
3 PLC	± -
4 PLC	± -
ANGLES	± 2′

MATERIAL: See table (vedi tabella)

FINISH: -

DWN	C.CORDOLA 16SEPT.99
CHK	C. CORDOLA 16SEPT.99
APVD	G. TURCO 16SEPT.99
PRODUCT SPEC	108-20033
APPLICATION SPEC	-
WEIGHT	-

TE Connectivity

NAME: CLUSTER BLOCK REVERSE HOUSING .090 DIA

SIZE	CAGE CODE	DRAWING NO	RESTRICTED TO
A3		C-284406	-

CUSTOMER DRAWING | SCALE 4:1 | SHEET 1 OF 1 | REV C5