# Reference Drawing

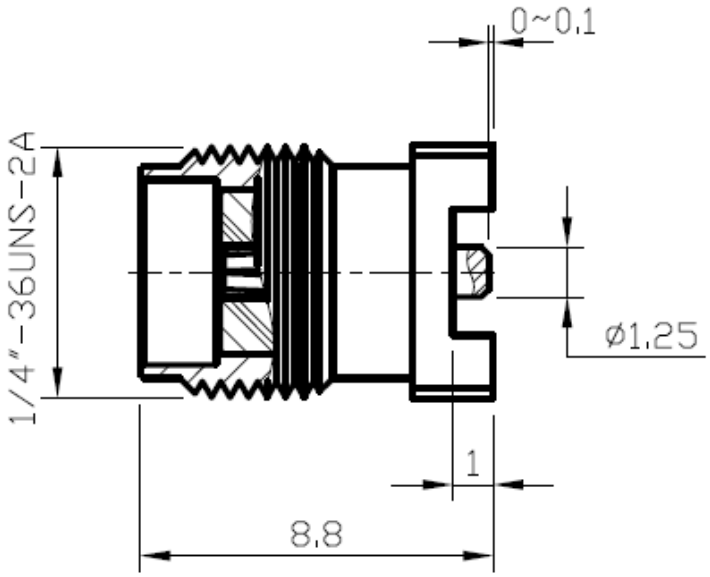


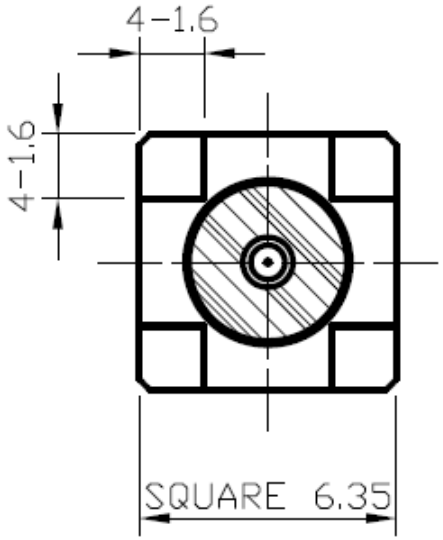


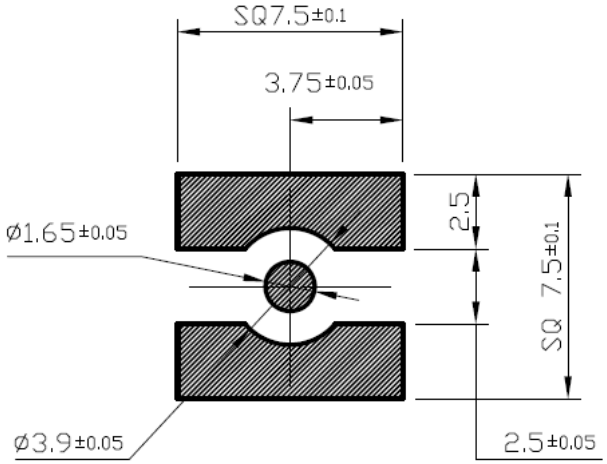


P.C.B LAYOUT (REF)

## *Product Specification*

| Items | Specs |
|---|---|
| Impedance | 50 Ω |
| Frequency Range | DC~18 GHz |
| V.S.W.R | ≦1.3 |
| Working Voltage | AC 500V |
| Temperture Range | -65℃~165℃ |

| | |
|---|---|
| RoHS Compliant | Cd ≦75ppm |
| REMARKS | BRASS:Cd ≦75ppmPHOSPHOR BRONZE:Pb <4wt% |

| | | |
|---|---|---|
| SCALE NONE | TYCLON | PART NUMBER SMA-J-SMT |
| UNIT mm | | |
| DATE 2025/04/09 | PROJECTION TO-CONNE CO.,LTD | |