42169-2 ✔ ACTIVE

TE Internal #: 42169-2

Spade Tongue Terminal, 18 – 14 AWG, #10 Stud, 4.82 mm [.19 in] Stud Diameter, Open Barrel, Straight, Tin Plating, Uninsulated

View on TE.com >

Terminals & Splices > Spade Terminals

Spade Terminal Type: **Spade Tongue Terminal**

Wire Size: **1624 – 4106 CMA**

Stud Size: **#10**

Features

Product Type Features

Shape Description	Spring Spade
Stud Size	#10
Sealable	No
Compatible With Discrete Wire Type	Stranded
Wire Insulation Support Retention Type	Insulation Support

Body Features

Product Weight	1.043 g

Contact Features

Contact Base Material	Brass
Spade Terminal Type	Spade Tongue Terminal
Barrel Type	Open
Terminal Orientation	Straight
Terminal Plating Material	Tin
Contact Underplating Material	Nickel

Mechanical Attachment

Wire Insulation Support	With

Dimensions

	.1 in
Wire Size	1624 – 4106 CMA
Stud Diameter	4.82 mm[.19 in]
Tongue Thickness	.76 mm[.03 in]
Product Length	20.83 mm[.82 in]
Barrel Inside Diameter	1.77 mm, 2.92 mm[.07 in][.115 in]
Compatible Insulation Diameter (Max)	3.56 mm[.14 in]
Compatible Insulation Diameter Range	2.54 – 3.56 mm[.1 – .14 in]

Usage Conditions

Insulation Option	Uninsulated
Operating Temperature Range	-40 – 110 °C[-40 – 230 °F]

Operation/Application

Compatible With Wire Base Material	Copper

Industry Standards

Government Qualified Terminal	No

Packaging Features

Packaging Quantity	10000
Packaging Method	Strip/Reel

Product Compliance

For compliance documentation, visit the product page on TE.com>

EU RoHS Directive 2011/65/EU	Compliant
EU ELV Directive 2000/53/EC	Compliant
China RoHS 2 Directive MIIT Order No 32, 2016	No Restricted Materials Above Threshold
EU REACH Regulation (EC) No. 1907/2006	Current ECHA Candidate List: JUNE 2025 (250) Candidate List Declared Against: JUNE 2025 (250) Does not contain REACH SVHC
Halogen Content	Low Halogen - Br, Cl, F < 900 ppm per homogenous material. Also BFR/CFR/PVC Free
Solder Process Capability	Not applicable for solder process capability

Product Compliance Disclaimer

This information is provided based on reasonable inquiry of our suppliers and represents our current actual knowledge based on the information they provided. This information is subject to change. The part numbers that TE has identified as EU RoHS compliant have a maximum concentration of 0.1% by weight in homogenous materials for lead, hexavalent chromium, mercury, PBB, PBDE, DBP, BBP, DEHP, DIBP, and 0.01% for cadmium, or qualify for an exemption to these limits as defined in the Annexes of Directive 2011/65/EU (RoHS2). Finished electrical and electronic equipment products will be CE marked as required by Directive 2011/65/EU. Components may not be CE marked. Additionally, the part numbers that TE has identified as EU ELV compliant have a maximum concentration of 0.1% by weight in homogenous materials for lead, hexavalent chromium, and mercury, and 0.01% for cadmium, or qualify for an exemption to these limits as defined in the Annexes of Directive 2000/53/EC (ELV). Regarding the REACH Regulation, the information TE provides on SVHC in articles for this part number is based on the latest European Chemicals Agency (ECHA) 'Guidance on requirements for substances in articles' posted at this URL: https://echa.europa.eu/guidance-documents/guidance-on-reach

Compatible Parts

TE Part # 2150754-1
OCEAN_2.0_APPLICATOR-E-130F180F-REM

TE Part # 7-2150754-7
OCEAN_2.0_SPARE_PART_KIT-130F180F

TE Part # 1742173-1
SPRING SPADE TERMINAL 18-14 AWG TPBR

TE Part # 2150754-2
OCEAN_2.0_APPLICATOR-E-130F180F-REA

Customers Also Bought

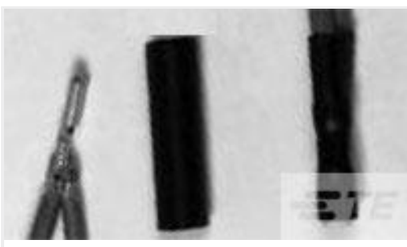

TE Part #5201972022
RT-3-NO.2-0-STK

TE Part #42511-2
250 FASTON FLAG REC 18-12 AWG TPBR

TE Part #42565-2
FF 250 TAB 18-14AWG TPBR PRE CRIMPED

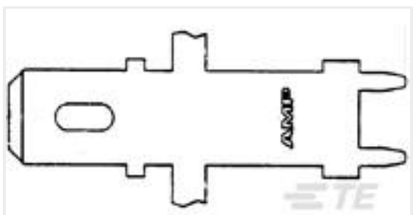

TE Part #63949-1
250 FASTON TAB TPBR

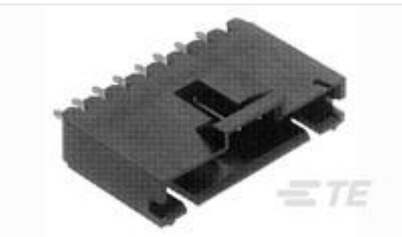

TE Part #5-103669-4
05 MTE HDR SRST LATCH W/HLDWN

TE Part #170889-3
SLEEVE DIA5 SHUR PLUG NAT

TE Part #350851-2
UMNL SOK 24-18 AUNIBR

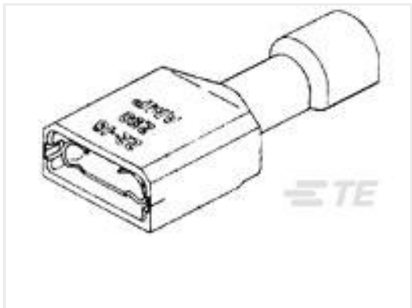

TE Part #2-520181-4
ULTRA-FAST 187 ASY REC 22-18 TPPB

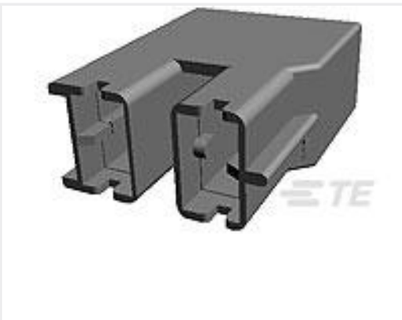

TE Part #926521-2
PL 250 REC HSG 2P NYLON BLACK

TE Part #2-2176330-2
CRGP 2010 560R 1%

Documents

Product Drawings

SPRING SPADE TERMINAL 18-14 AWG TPBR

English

CAD Files

3D PDF

3D

Customer View Model

ENG_CVM_CVM_42169-2_AE_c-42169-2-ae.2d_dxf.zip

English

Customer View Model

ENG_CVM_CVM_42169-2_AE_c-42169-2-ae.3d_igs.zip

English

Customer View Model

ENG_CVM_CVM_42169-2_AE_c-42169-2-ae.3d_stp.zip

English

By downloading the CAD file I accept and agree to the Terms and Conditions of use.

Product Specifications

Engineering Report

English

Agency Approvals

UL Report

English