ORDER NO.	WOODHEAD NO.	COLOR
130142-0044	2975	YELLOW

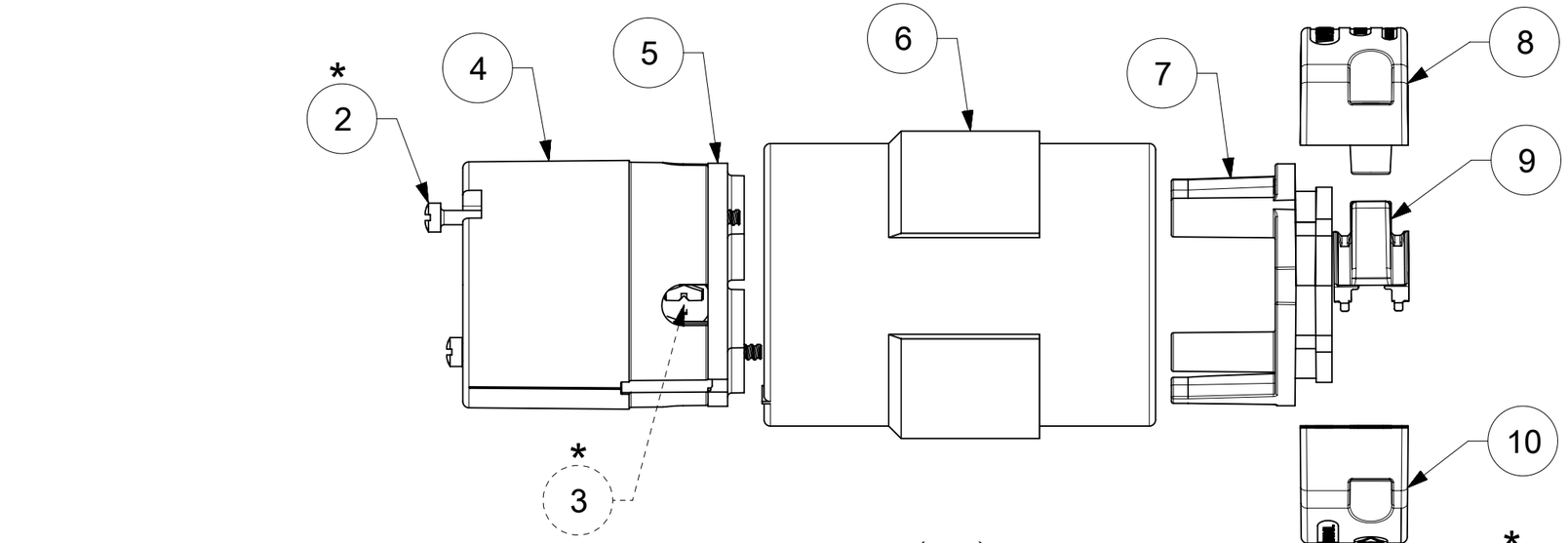

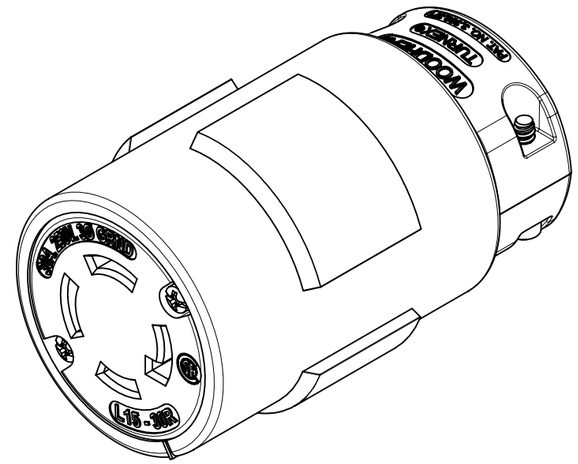

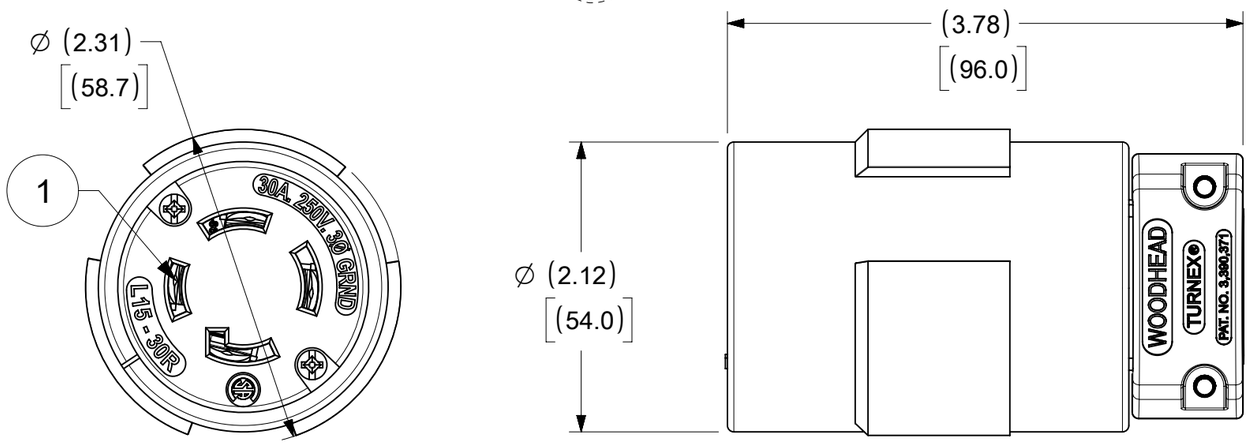

WIRING TERMINATION

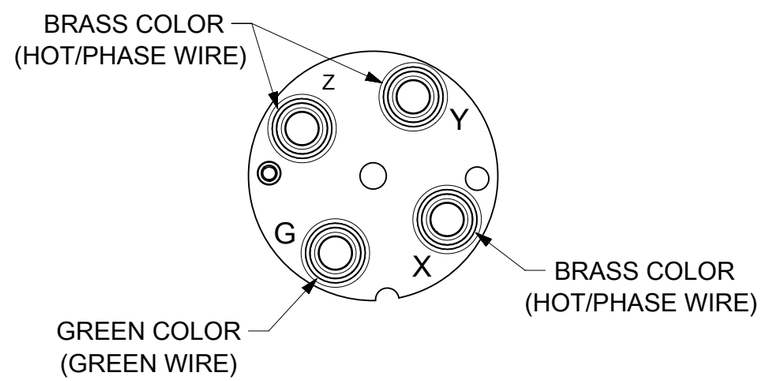

* FOR SCREW TORQUE, SEE ASSEMBLY INSTRUCTIONS

ITEM NO.	DESCRIPTIONS	MATERIAL	QTY.
1	CLIP ASSEMBLY	BRASS, NICKEL PLATED	4
2	RETAINING SCREWS	STAINLESS STEEL	2
3	TERMINAL SCREWS/CLAMP ASSEMBLY	BRASS, ZINC PLATED	4
4	INSERT	NYLON	1
5	TERMINAL COVER	POLYCARBONATE	1
6	CONNECTOR HUSK	RUBBER	1
7	CLAMP SUPPORT	NYLON	1
8	CLAMP CORD MALE	NYLON	1
9	CLAMP CORD INSERT	NYLON	1
10	CLAMP CORD FEMALE	NYLON	1
11	RETAINING SCREWS	STAINLESS STEEL	2

DOCUMENT STATUS	P1	RELEASE DATE	2020/06/02 03:22:19

FORMAT: Eng-lega-master-tb-prod-B
REVISION: D
DATE: 2018/01/18

SYMBOLS
▽F = 0
▽E = 0
▽D = 0
▽C = 0
▼ = 0
▽B = 0
☒ = 0
■ = 0
▽A = 0

THIS DRAWING CONTAINS INFORMATION THAT IS PROPRIETARY TO MOLEX ELECTRONIC TECHNOLOGIES, LLC AND SHOULD NOT BE USED WITHOUT WRITTEN PERMISSION

DIMENSION UNITS: INCH/MM
SCALE: NTS

GENERAL TOLERANCES (UNLESS SPECIFIED)

	MM	INCH
4 PLACES	±	±
3 PLACES	±	±
2 PLACES	±	±
1 PLACE	±	±
0 PLACES	±	±
ANGULAR TOL	± °	

DRAFT WHERE APPLICABLE MUST REMAIN WITHIN DIMENSIONS

CURRENT REV DESC: NEW RELEASE

EC NO: 628448
DRWN: VHANDI 2019/07/01
CHK'D: DNGUYEN62 2020/02/14
APPR: HKNEELAND 2020/06/02

INITIAL REVISION:
DRWN: VHANDI 2019/07/01
APPR: HKNEELAND 2020/06/02

THIRD ANGLE PROJECTION | DRAWING: B-SIZE | SERIES: 130142

molex

SUPER-SAFEWAY CONN NEMA 3P4W L15-30R

PRODUCT CUSTOMER DRAWING

DOCUMENT NUMBER	DOC TYPE	DOC PART	REVISION
1301420044	PSD	000	A

MATERIAL NUMBER	CUSTOMER	SHEET NUMBER
SEE TABLE	GENERAL MARKET	1 OF 1