SIEMENS

## Data sheet 3RV2031-4UB10



Circuit breaker size S2 for motor protection, Class 20 A-release 32...40 A N-release 585 A screw terminal Standard switching capacity

| | |
|---|---|
| **product brand name** | SIRIUS |
| **product designation** | Circuit breaker |
| **design of the product** | For motor protection |
| **product type designation** | 3RV2 |
| **General technical data** | |
| **size of the circuit-breaker** | S2 |
| **size of contactor can be combined company-specific** | S2 |
| product extension auxiliary switch | Yes |
| **power loss [W] for rated value of the current** | |
| ● at AC in hot operating state | 20 W |
| ● at AC in hot operating state per pole | 6.7 W |
| insulation voltage with degree of pollution 3 at AC rated value | 690 V |
| **surge voltage resistance rated value** | 6 kV |
| **shock resistance according to IEC 60068-2-27** | 25g / 11 ms Sinus |
| **mechanical service life (operating cycles)** | |
| ● of the main contacts typical | 50 000 |
| ● of auxiliary contacts typical | 50 000 |
| electrical endurance (operating cycles) typical | 50 000 |
| **reference code according to IEC 81346-2** | Q |
| **Substance Prohibitance (Date)** | 10/15/2014 |
| **Ambient conditions** | |
| installation altitude at height above sea level maximum | 2 000 m |
| **ambient temperature** | |
| ● during operation | -20 ... +60 °C |
| ● during storage | -50 ... +80 °C |
| ● during transport | -50 ... +80 °C |
| relative humidity during operation | 10 ... 95 % |
| **Main circuit** | |
| **number of poles for main current circuit** | 3 |
| **adjustable current response value current of the current-dependent overload release** | 32 ... 40 A |
| **operating voltage** | |
| ● rated value | 20 ... 690 V |
| ● at AC-3 rated value maximum | 690 V |
| ● at AC-3e rated value maximum | 690 V |
| **operating frequency rated value** | 50 ... 60 Hz |
| **operational current rated value** | 40 A |
| **operational current** | |
| ● at AC-3 at 400 V rated value | 40 A |
| ● at AC-3e at 400 V rated value | 40 A |


Subject to change without notice
© Copyright Siemens

| | |
|---|---|
| **operating power** | |
| ● at AC-3 | |
| — at 230 V rated value | 11 kW |
| — at 400 V rated value | 18.5 kW |
| — at 500 V rated value | 22 kW |
| — at 690 V rated value | 37 kW |
| ● at AC-3e | |
| — at 230 V rated value | 11 kW |
| — at 400 V rated value | 18.5 kW |
| — at 500 V rated value | 22 kW |
| — at 690 V rated value | 37 kW |
| **operating frequency** | |
| ● at AC-3 maximum | 15 1/h |
| ● at AC-3e maximum | 15 1/h |
| **Protective and monitoring functions** | |
| **product function** | |
| ● ground fault detection | No |
| ● phase failure detection | Yes |
| **trip class** | CLASS 20 |
| **design of the overload release** | thermal |
| **maximum short-circuit current breaking capacity (Icu)** | |
| ● at AC at 240 V rated value | 100 kA |
| ● at AC at 400 V rated value | 65 kA |
| ● at AC at 500 V rated value | 10 kA |
| ● at AC at 690 V rated value | 4 kA |
| **operating short-circuit current breaking capacity (Ics) at AC** | |
| ● at 240 V rated value | 100 kA |
| ● at 400 V rated value | 30 kA |
| ● at 500 V rated value | 5 kA |
| ● at 690 V rated value | 2 kA |
| response value current of instantaneous short-circuit trip unit | 585 A |
| **UL/CSA ratings** | |
| **full-load current (FLA) for 3-phase AC motor** | |
| ● at 480 V rated value | 40 A |
| ● at 600 V rated value | 40 A |
| **yielded mechanical performance [hp]** | |
| ● for single-phase AC motor | |
| — at 110/120 V rated value | 3 hp |
| — at 230 V rated value | 7.5 hp |
| ● for 3-phase AC motor | |
| — at 200/208 V rated value | 15 hp |
| — at 220/230 V rated value | 15 hp |
| — at 460/480 V rated value | 30 hp |
| — at 575/600 V rated value | 40 hp |
| **Short-circuit protection** | |
| **product function short circuit protection** | Yes |
| **design of the short-circuit trip** | magnetic |
| **design of the fuse link for IT network for short-circuit protection of the main circuit** | |
| ● at 240 V | none required |
| ● at 400 V | 125 |
| ● at 500 V | 100 |
| ● at 690 V | 80 |
| **Installation/ mounting/ dimensions** | |
| **mounting position** | any |
| **fastening method** | screw and snap-on mounting onto 35 mm DIN rail according to DIN EN 60715 |
| **height** | 140 mm |
| **width** | 55 mm |
| **depth** | 149 mm |
| **required spacing** | |
| ● with side-by-side mounting at the side | 0 mm |


© Copyright Siemens

| | |
|---|---|
| ● for grounded parts at 400 V | |
| — downwards | 50 mm |
| — upwards | 50 mm |
| — at the side | 10 mm |
| ● for live parts at 400 V | |
| — downwards | 50 mm |
| — upwards | 50 mm |
| — at the side | 10 mm |
| ● for grounded parts at 500 V | |
| — downwards | 50 mm |
| — upwards | 50 mm |
| — at the side | 10 mm |
| ● for live parts at 500 V | |
| — downwards | 50 mm |
| — upwards | 50 mm |
| — at the side | 10 mm |
| ● for grounded parts at 690 V | |
| — downwards | 50 mm |
| — upwards | 50 mm |
| — at the side | 10 mm |
| ● for live parts at 690 V | |
| — downwards | 50 mm |
| — upwards | 50 mm |
| — at the side | 10 mm |
| **Connections/ Terminals** | |
| **type of electrical connection** | |
| ● for main current circuit | screw-type terminals |
| **arrangement of electrical connectors for main current circuit** | Top and bottom |
| **type of connectable conductor cross-sections** | |
| ● for main contacts | |
| — solid or stranded | 2x (1 ... 25 mm²), 1x (1 ... 35 mm²) |
| — finely stranded with core end processing | 2x (1 ... 16 mm²), 1x (1 ... 25 mm²) |
| ● for AWG cables for main contacts | 2x (18 ... 3), 1x (18 ... 2) |
| **tightening torque** | |
| ● for main contacts with screw-type terminals | 3 ... 4.5 N·m |
| **design of screwdriver shaft** | Diameter 5 to 6 mm |
| **size of the screwdriver tip** | Pozidriv size 2 |
| **design of the thread of the connection screw** | |
| ● for main contacts | M6 |
| **Safety related data** | |
| **B10 value** | |
| ● with high demand rate according to SN 31920 | 5 000 |
| **proportion of dangerous failures** | |
| ● with low demand rate according to SN 31920 | 50 % |
| ● with high demand rate according to SN 31920 | 50 % |
| **failure rate [FIT]** | |
| ● with low demand rate according to SN 31920 | 50 FIT |
| T1 value for proof test interval or service life according to IEC 61508 | 10 a |
| **protection class IP on the front according to IEC 60529** | IP20 |
| **touch protection on the front according to IEC 60529** | finger-safe, for vertical contact from the front |
| display version for switching status | Handle |
| **Certificates/ approvals** | |

| **General Product Approval** | | | | **Declaration of Conformity** |
|---|---|---|---|---|
| CCC | Confirmation | UL | KC | EAC, CE EG-Konf. |


Subject to change without notice
© Copyright Siemens

| Declaration of Conformity | Test Certificates | | Marine / Shipping | | |
|---|---|---|---|---|---|
| | Special Test Certificate | Type Test Certificates/Test Report | | | |

| Marine / Shipping | | | other | Railway |
|---|---|---|---|---|
| | | | Confirmation | Confirmation |

| Railway |
|---|
| Vibration and Shock |

## Further information

**Siemens has decided to exit the Russian market (see here).**
https://press.siemens.com/global/en/pressrelease/siemens-wind-down-russian-business

**Siemens is working on the renewal of the current EAC certificates.**
Please contact your local Siemens office on the status of validity of the EAC certification if you intend to import or offer to supply these products to an EAC relevant market (other than the sanctioned EAEU member states Russia or Belarus).

**Information on the packaging**
https://support.industry.siemens.com/cs/ww/en/view/109813875

**Information- and Downloadcenter (Catalogs, Brochures,…)**
https://www.siemens.com/ic10

**Industry Mall (Online ordering system)**
https://mall.industry.siemens.com/mall/en/en/Catalog/product?mlfb=3RV2031-4UB10

**Cax online generator**
http://support.automation.siemens.com/WW/CAXorder/default.aspx?lang=en&mlfb=3RV2031-4UB10

**Service&Support (Manuals, Certificates, Characteristics, FAQs,...)**
https://support.industry.siemens.com/cs/ww/en/ps/3RV2031-4UB10

**Image database (product images, 2D dimension drawings, 3D models, device circuit diagrams, EPLAN macros, ...)**
http://www.automation.siemens.com/bilddb/cax_de.aspx?mlfb=3RV2031-4UB10&lang=en

**Characteristic: Tripping characteristics, I²t, Let-through current**
https://support.industry.siemens.com/cs/ww/en/ps/3RV2031-4UB10/char

**Further characteristics (e.g. electrical endurance, switching frequency)**
http://www.automation.siemens.com/bilddb/index.aspx?view=Search&mlfb=3RV2031-4UB10&objecttype=14&gridview=view1


Subject to change without notice
© Copyright Siemens

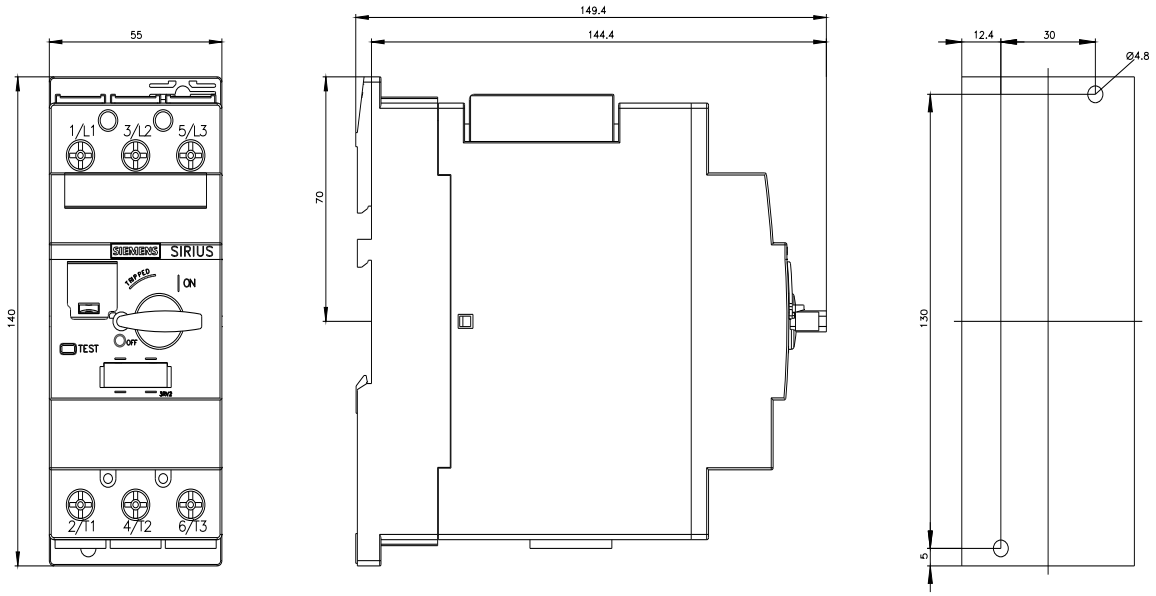


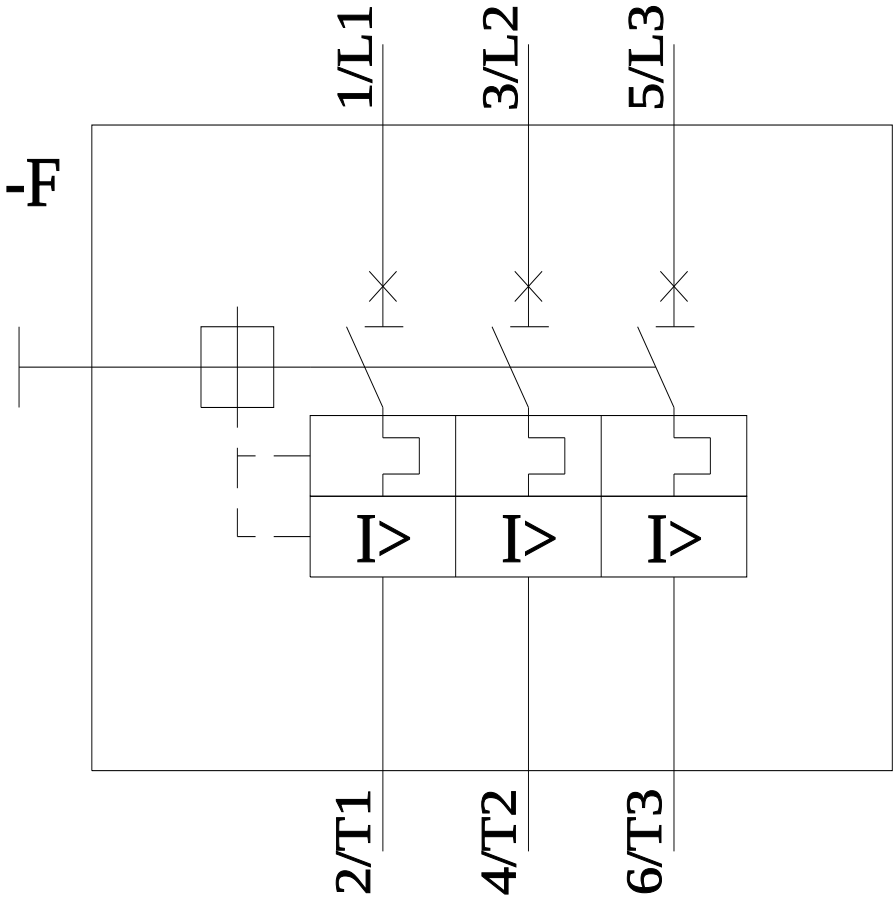


**last modified:** 11/21/2022


Subject to change without notice
© Copyright Siemens

© Copyright Siemens