100100-1 ✔ ACTIVE

Positive Lock | Positive Lock 250

TE Internal #: 100100-1

Crimp Terminal Housings, Receptacle, Receptacle, 2 Position, Straight, UL 94V-0, Black, Polyamide, Mating Alignment, Positive Lock 250

View on TE.com >

Terminals & Splices > Terminal Housings, Insulation Sleeves & Blocks > Crimp Terminal Housings

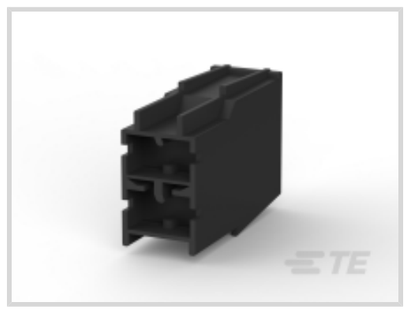





Terminal Type: **Receptacle**

Connector & Housing Type: **Receptacle**

Number of Positions: **2**

Terminal Orientation: **Straight**

UL Flammability Rating: **UL 94V-0**

Features

Product Type Features

Sealable	No
Connector System	Wire-to-Board, Wire-to-Wire
Connector & Contact Terminates To	Wire & Cable
Connector & Housing Type	Receptacle

Configuration Features

Number of Positions	2

Body Features

Primary Product Color	Black

Contact Features

Terminal Type	Receptacle
Terminal Orientation	Straight
Contact Mating Retention	Without

Mechanical Attachment

Mating Alignment Type	Polarization
Mating Alignment	With
Connector Mounting Type	Cable Mount (Free-Hanging)

Housing Features

Housing Material	Polyamide
Centerline (Pitch)	6.3 mm[.248 in]

Usage Conditions

Operating Temperature Range	-40 – 105 °C[-40 – 221 °F]

Industry Standards

UL Flammability Rating	UL 94V-0

Packaging Features

Packaging Quantity	5500
Packaging Method	Carton

Product Compliance

For compliance documentation, visit the product page on TE.com>

EU RoHS Directive 2011/65/EU	Compliant
EU ELV Directive 2000/53/EC	Compliant
China RoHS 2 Directive MIIT Order No 32, 2016	No Restricted Materials Above Threshold
EU REACH Regulation (EC) No. 1907/2006	Current ECHA Candidate List: JAN 2024 (240) Candidate List Declared Against: JAN 2019 (197) Does not contain REACH SVHC
Halogen Content	Not Yet Reviewed for halogen content
Solder Process Capability	Not applicable for solder process capability

Product Compliance Disclaimer

This information is provided based on reasonable inquiry of our suppliers and represents our current actual knowledge based on the information they provided. This information is subject to change. The part numbers that TE has identified as EU RoHS compliant have a maximum concentration of 0.1% by weight in homogenous materials for lead, hexavalent chromium, mercury, PBB, PBDE, DBP, BBP, DEHP, DIBP, and 0.01% for cadmium, or qualify for an exemption to these limits as defined in the Annexes of Directive 2011/65/EU (RoHS2). Finished electrical and electronic equipment products will be CE marked as required by Directive 2011/65/EU. Components may not be CE marked. Additionally, the part numbers that TE has identified as EU ELV compliant have a maximum concentration of 0.1% by weight in homogenous materials for lead, hexavalent chromium, and mercury, and 0.01% for cadmium, or qualify for an exemption to these limits as defined in the Annexes of Directive 2000/53/EC (ELV). Regarding the REACH Regulation, the information TE provides on SVHC in articles for this part number is based on the latest European Chemicals Agency (ECHA) 'Guidance on requirements for substances in articles' posted at this URL: https://echa.europa.eu/guidance-documents/guidance-on-reach

Compatible Parts



TE Part # 926646-1
PL 250 REC HSG 8P NYLON BLACK



TE Part # 926330-1
PL 250 REC HSG 6P NYLON BLACK

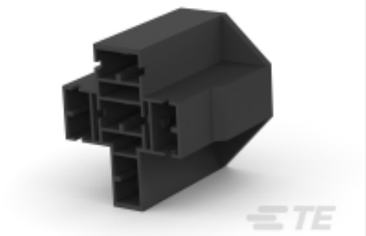

TE Part # 926526-1
PL MKI 250 REC HSG 5P NYLON BLACK

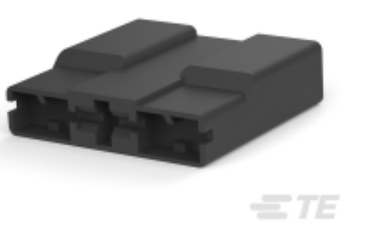

TE Part # 926523-1
3P.POS.LOCK HSG

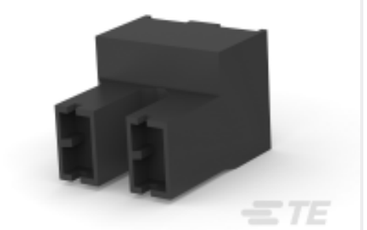

TE Part # 926319-1
PL 250 REC HSG 2P NYLON BLACK



TE Part # 927389-2
POSITIVE LOCK 3P HOUSING PA 6.6 WHITE



TE Part # 927076-1
PL HOUSING 0.6 PA 6.6 + PE-GF13 BLACK



TE Part # 926521-2
PL 250 REC HSG 2P NYLON BLACK



TE Part # 926522-2
PL 250 REC HSG 2P NYLON NAT



TE Part # 926522-1
PL 250 REC HSG 2P NYLON BLACK



TE Part # 1-926522-1
PL 250 REC HSG 2P NYLON BLACK



TE Part # 185010-2
HEADLIGHT HOUSING HOUSING



TE Part # 178833-1
POSITIVE LOCK .250 HOUSING RECEPTACLE

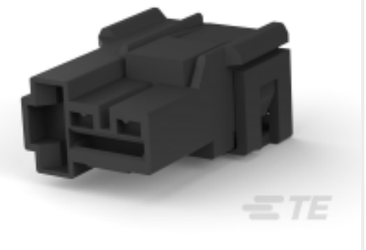

TE Part # 172864-2
250 HSG. REC. 6mm 2P BLACK



TE Part # 1-2133341-2
250 HSG. PL MKI REC. NAT



TE Part # 365016-1
POSITIVE LOCK (PL) HSG REC



TE Part # 927389-1
PL 3P HOUSING PA66 BLACK



TE Part # 927422-1
POSITIVE LOCK 3P HOUSING PA6.6 BLACK



TE Part # 1-926522-2
PL 250 REC HSG 2P NYLON NAT



TE Part # 172433-2
250 AUTOMOTIVE POSTIVE LOCK 2P

Also in the Series | Positive Lock 250

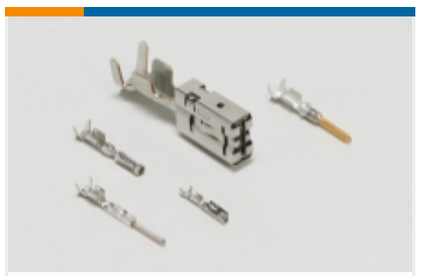

Automotive Terminals(1)



Crimp Terminal Housings(191)



Insertion & Extraction Tools(3)



Insulation Boots & Sleeves(4)

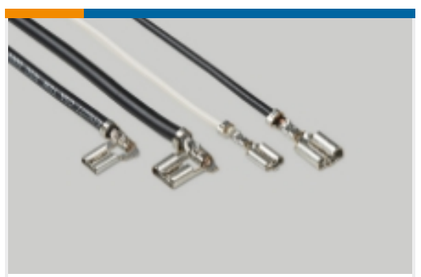

Quick Disconnects(186)

Customers Also Bought

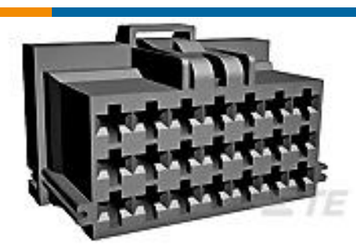

TE Part #7-968975-1
MCP2,8 GEH ASSY 21P

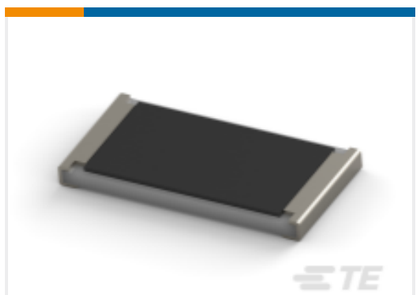

TE Part #3-2176070-4
SMD Power Resistor: 2 Watt, 3521 Series



TE Part #2138529-1
STRAIN RELIEF,8 POSITION AMPSEAL



TE Part #1587724-3
OUTER FERRULE, SIZE C, HVA280



TE Part #1-2176349-6
CRGCQ 2512 180R 1%



TE Part #DTM06-08SB
PLG, 8P, BLK, N, B

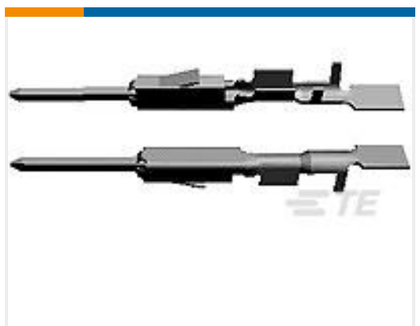

TE Part #5-963716-1
MQS0,63 Sn tab LL unseal. 0,5-0,75



TE Part #1587977-2
INNER HOUSING, PLUG, HVA280-2PHM, PASS T

Documents

Product Drawings

2 POS POSITIVE LOCK (PL) HOUSING

English

CAD Files

3D PDF

3D

Customer View Model

ENG_CVM_CVM_100100-1_O.2d_dxf.zip

English

Customer View Model

ENG_CVM_CVM_100100-1_O.3d_igs.zip

English

Customer View Model

ENG_CVM_CVM_100100-1_O.3d_stp.zip

English

By downloading the CAD file I accept and agree to the Terms and Conditions of use.

Agency Approvals

UL Report

English