Data sheet

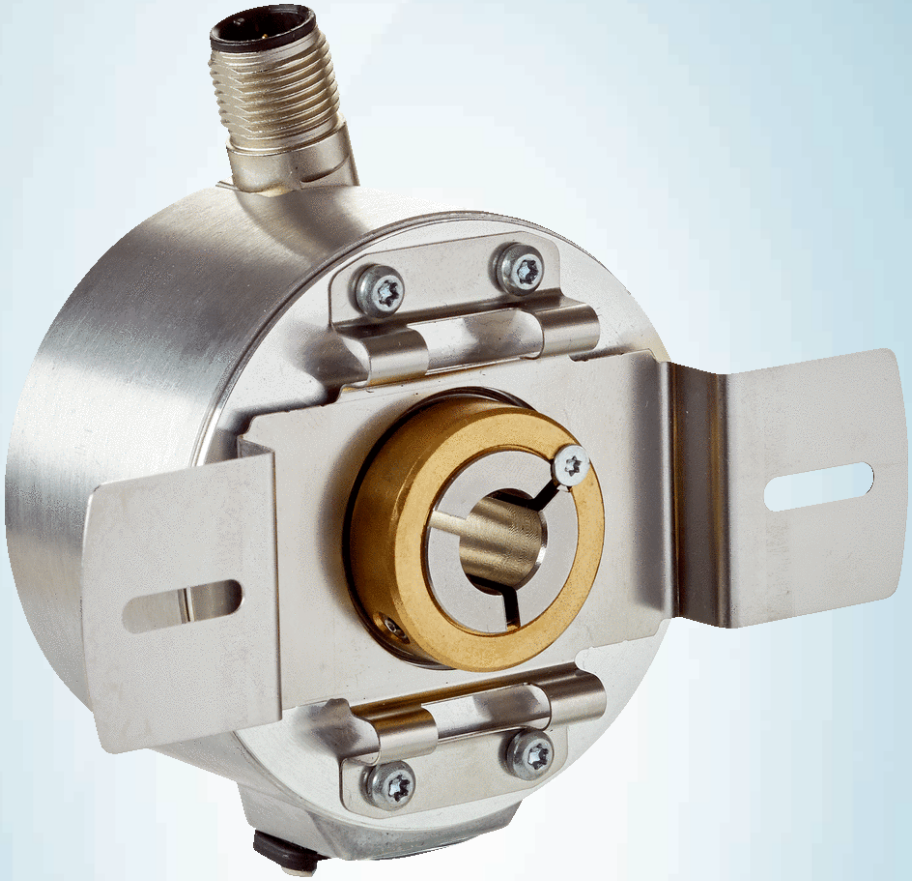

# DUS60E-TCKF0ACA

## DUS60

INCREMENTAL ENCODERS

SICK
Sensor Intelligence.

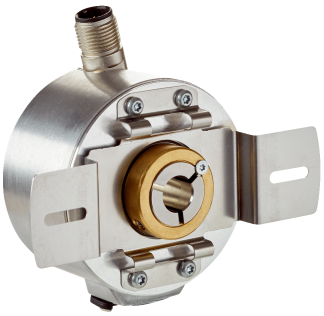

Illustration may differ

## Ordering information

| Type | part no. |
|---|---|
| DUS60E-TCKF0ACA | 1128021 |

Other models and accessories ➜ www.sick.com/DUS60

## Detailed technical data

### Safety-related parameters

| | |
|---|---|
| **$MTTF_D$ (mean time to dangerous failure)** | 275 years (EN ISO 13849-1) [1] |

[1] This product is a standard product and does not constitute a safety component as defined in the Machinery Directive. Calculation based on nominal load of components, average ambient temperature 40 °C, frequency of use 8760 h/a. All electronic failures are considered hazardous. For more information, see document no. 8015532.

### Performance

| | |
|---|---|
| **Measuring step** | 90°, electric/pulses per revolution |
| **Measuring step deviation** | ± 18° / pulses per revolution |
| **Error limits** | Measuring step deviation x 3 |
| **Duty cycle** | ≤ 0.5 ± 5 % |

### Interfaces

| | |
|---|---|
| **Communication interface** | Incremental |
| **Communication Interface detail** | TTL / HTL [1] |
| **Number of signal channels** | 6-channel |
| **Programmable/configurable** | ✓ |
| **Parameterising data** | DIP switch, selectable output |
| **Output function** | A and B output |
| **Initialization time** | < 5 ms [2] |
| **Output frequency** | + 60 kHz |
| **Load current** | ≤ 30 mA, per channel |
| **Operating current** | ≤ 120 mA (without load) |
| **Power consumption** | ≤ 1.25 W (without load) |
| **DIP switch parameters** | |
| Pulses per revolution | ✓ |

[1] The output is not selectable for DIP switch configurations E, F, and G. The output voltage value is dependent on the supply voltage.
[2] Valid positional data can be read once this time has elapsed.

| | |
|---|---|
| Output voltage | ✓ |
| Direction of rotation | ✓ |
| Configuration switches | 1800 PPR values, direction selection, TTL/HTL selectable |

[1] The output is not selectable for DIP switch configurations E, F, and G. The output voltage value is dependent on the supply voltage.
[2] Valid positional data can be read once this time has elapsed.

## Electronics

| | |
|---|---|
| **Connection type** | Male connector, M12, 4-pin, universal [1] |
| **Supply voltage** | 4.75 ... 30 V |
| **Reference signal, number** | 1 |
| **Reference signal, position** | 180°, electric, gated with A |
| **Reverse polarity protection** | ✓ |
| **Short-circuit protection of the outputs** | ✓ |

[1] The universal connection is rotatable so that it is possible to position the conector in the radial or axial direction.

## Mechanics

| | |
|---|---|
| **Mechanical design** | Through hollow shaft |
| **Shaft diameter** | 3/8″Front clamp |
| **Flange type / stator coupling** | 2-point stator coupling, slot, hole diameter 63 mm – 83 mm |
| **Weight** | 0.25 kg [1] |
| **Shaft material** | Stainless steel |
| **Flange material** | Aluminum |
| **Housing material** | Aluminum |
| **Material, cable** | PVC |
| **Start up torque** | 0.5 Ncm (+20 °C) |
| **Operating torque** | 0.4 Ncm (+20 °C) |
| **Permissible movement static** | ± 0.3 mm (radial)<br>± 0.5 mm (axial) |
| **Permissible movement dynamic** | ± 0.1 mm (radial)<br>± 0.2 mm (axial) |
| **Operating speed** | 1,500 $min^{-1}$ |
| **Moment of inertia of the rotor** | 50 $gcm^2$ |
| **Bearing lifetime** | 3.6 x $10^9$ revolutions |
| **Angular acceleration** | ≤ 500,000 $rad/s^2$ |

[1] Based on encoder with male connector.

## Ambient data

| | |
|---|---|
| **EMC** | According to EN 61000-6-2 and EN 61000-6-3 |
| **Enclosure rating** | IP65 [1] |
| **Permissible relative humidity** | 90 % (Condensation not permitted) |
| **Operating temperature range** | –30 °C ... +90 °C |
| **Storage temperature range** | –40 °C ... +75 °C |

[1] When the mating connector is installed and the DIP switch door is sealed with the encoder housing.

| | |
|---|---|
| **Resistance to shocks** | 100 g (EN 60068-2-27) |
| **Resistance to vibration** | 30 g, 10 Hz ... 2,000 Hz (EN 60068-2-6) |

[1] When the mating connector is installed and the DIP switch door is sealed with the encoder housing.

## Classifications

| | |
|---|---|
| **ECLASS 5.0** | 27270501 |
| **ECLASS 5.1.4** | 27270501 |
| **ECLASS 6.0** | 27270590 |
| **ECLASS 6.2** | 27270590 |
| **ECLASS 7.0** | 27270501 |
| **ECLASS 8.0** | 27270501 |
| **ECLASS 8.1** | 27270501 |
| **ECLASS 9.0** | 27270501 |
| **ECLASS 10.0** | 27270501 |
| **ECLASS 11.0** | 27270501 |
| **ECLASS 12.0** | 27270501 |
| **ETIM 5.0** | EC001486 |
| **ETIM 6.0** | EC001486 |
| **ETIM 7.0** | EC001486 |
| **ETIM 8.0** | EC001486 |
| **UNSPSC 16.0901** | 41112113 |

## Certificates

| | |
|---|---|
| **EU declaration of conformity** | ✓ |
| **UK declaration of conformity** | ✓ |
| **ACMA declaration of conformity** | ✓ |
| **China-RoHS** | ✓ |
| **cULus certificate** | ✓ |

## Dimensional drawing Through hollow shaft with front clamping

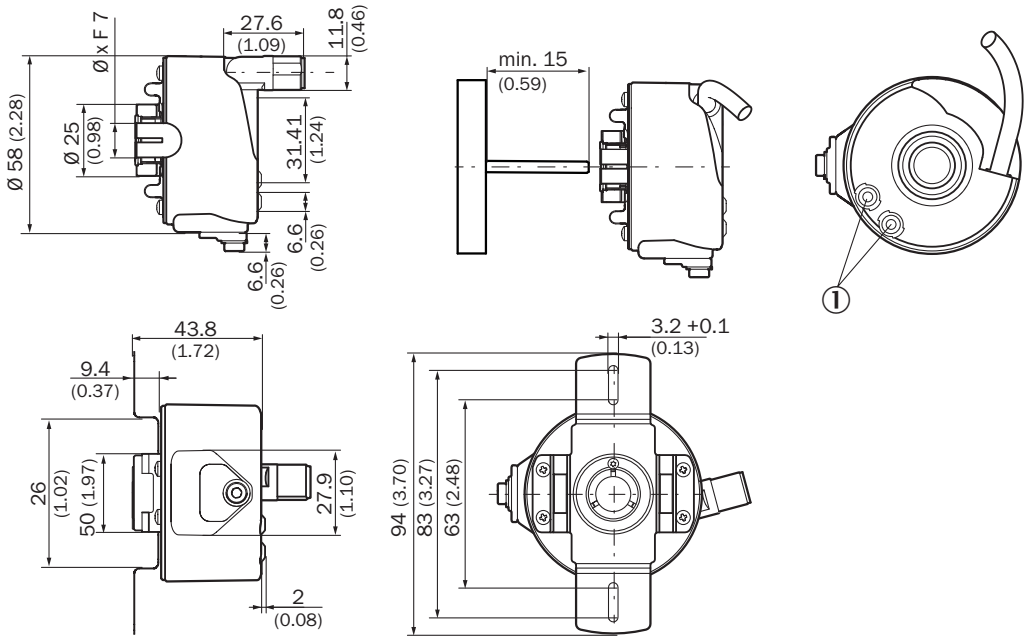


Dimensions in mm (inch)
① Status indicators

## PIN assignment View of M12 male device connector on encoder

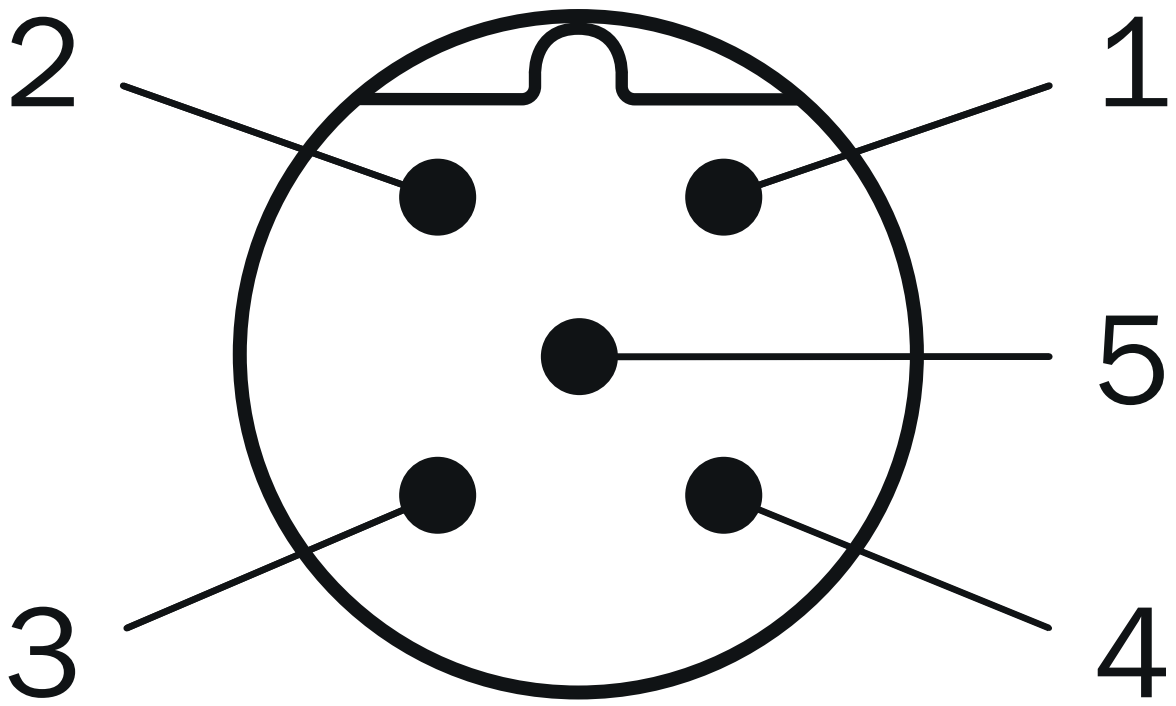


| Wire colors (cable connection) | Male connector M12, 4-pin | Male connector M12, 8-pin | Output function | | | | Explanation |
|---|---|---|---|---|---|---|---|
| | | | A | B | C | D | |
| Brown | - | 1 | A- | CW- | A- | A- | Signal |
| White | 4 | 2 | A | CW | A | A | Signal |
| Black | - | 3 | B- | CCW- | Direction- | B- | Signal |
| Pink | 2 | 4 | B | CCW | Direction | Fault (M12, 4-pin)B (M12, 8-pin and cable connection) | Signal |
| Yellow | - | 5 | Z- | Fault- | Fault- | Fault- | Signal |
| Violet | - | 6 | Z | Fault | Fault | Fault | Signal |
| Blue | 3 | 7 | GND | GND | GND | GND | Ground connection |
| Red | 1 | 8 | $U_S$ | $U_S$ | $U_S$ | $U_S$ | Supply voltage |
| - | - | - | Case | Case | Case | Case | Earth fault protection |
| Shielding | - | - | Shielding | Shielding | Shielding | Shielding | Shielding |

## Adjustments Status indicator LED

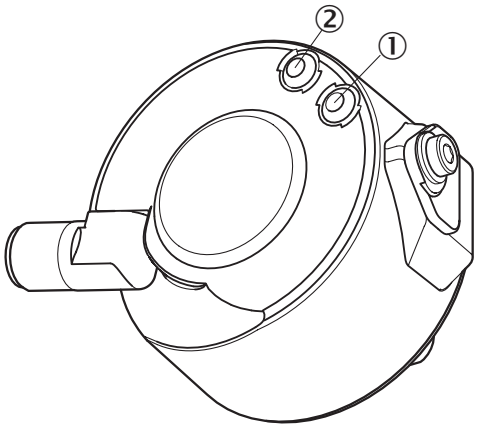


① Signal
② Fault/Power

## Recommended accessories

Other models and accessories ➜ www.sick.com/DUS60

| | Brief description | Type | part no. |
|---|---|---|---|
| connectors and cables | | | |
|  | • **Connection type head A:** Female connector, M12, 4-pin, straight, A-coded<br>• **Connection type head B:** Flying leads<br>• **Signal type:** Sensor/actuator cable<br>• **Cable:** 2 m, 4-wire, PUR, halogen-free<br>• **Description:** Sensor/actuator cable, shielded<br>• **Application:** Uncontaminated zones, Zones with oils and lubricants, Robot, Drag chain operation | YF2A24-020UB4XLEAX | 2105499 |
|  | • **Connection type head A:** Female connector, M12, 4-pin, straight, A-coded<br>• **Connection type head B:** Flying leads<br>• **Signal type:** Sensor/actuator cable<br>• **Cable:** 5 m, 4-wire, PUR, halogen-free<br>• **Description:** Sensor/actuator cable, shielded<br>• **Application:** Uncontaminated zones, Zones with oils and lubricants, Robot, Drag chain operation | YF2A24-050UB4XLEAX | 2095729 |
|  | • **Connection type head A:** Female connector, M12, 4-pin, straight, A-coded<br>• **Connection type head B:** Flying leads<br>• **Signal type:** Sensor/actuator cable<br>• **Cable:** 10 m, 4-wire, PUR, halogen-free<br>• **Description:** Sensor/actuator cable, shielded<br>• **Application:** Uncontaminated zones, Zones with oils and lubricants, Robot, Drag chain operation | YF2A24-100UB4XLEAX | 2095730 |
|  | • **Connection type head A:** Female connector, M12, 4-pin, straight, A-coded<br>• **Connection type head B:** Flying leads<br>• **Signal type:** Sensor/actuator cable<br>• **Cable:** 20 m, 4-wire, PUR, halogen-free<br>• **Description:** Sensor/actuator cable, shielded<br>• **Application:** Uncontaminated zones, Zones with oils and lubricants, Robot, Drag chain operation | YF2A24-200UB4XLEAX | 2105497 |
|  | • **Connection type head A:** Female connector, M12, 5-pin, straight, A-coded<br>• **Signal type:** CANopen, DeviceNet™<br>• **Description:** CANopen, shieldedDeviceNet™<br>• **Connection systems:** Screw-type terminals<br>• **Permitted cross-section:** ≤ 0.75 mm² | DOS-1205-GA | 6027534 |
|  | • **Connection type head A:** Female connector, M12, 4-pin, straight, A-coded<br>• **Connection type head B:** Flying leads<br>• **Signal type:** Sensor/actuator cable<br>• **Cable:** 0.6 m, 4-wire, PUR, halogen-free<br>• **Description:** Sensor/actuator cable, shielded<br>• **Application:** Uncontaminated zones, Zones with oils and lubricants, Robot, Drag chain operation | YF2A24-C60UB4XLEAX | 2145730 |
|  | • **Connection type head A:** Female connector, M12, 4-pin, straight, A-coded<br>• **Connection type head B:** Flying leads<br>• **Signal type:** Sensor/actuator cable<br>• **Cable:** 1 m, 4-wire, PUR, halogen-free<br>• **Description:** Sensor/actuator cable, shielded<br>• **Application:** Uncontaminated zones, Zones with oils and lubricants, Robot, Drag chain operation | YF2A24-010UB4XLEAX | 2145731 |
|  | • **Connection type head A:** Female connector, M12, 4-pin, straight, A-coded<br>• **Connection type head B:** Flying leads<br>• **Signal type:** Sensor/actuator cable<br>• **Cable:** 3 m, 4-wire, PUR, halogen-free<br>• **Description:** Sensor/actuator cable, shielded<br>• **Application:** Uncontaminated zones, Zones with oils and lubricants, Robot, Drag chain operation | YF2A24-030UB4XLEAX | 2145732 |

# SICK AT A GLANCE

SICK is one of the leading manufacturers of intelligent sensors and sensor solutions for industrial applications. A unique range of products and services creates the perfect basis for controlling processes securely and efficiently, protecting individuals from accidents and preventing damage to the environment.

We have extensive experience in a wide range of industries and understand their processes and requirements. With intelligent sensors, we can deliver exactly what our customers need. In application centers in Europe, Asia and North America, system solutions are tested and optimized in accordance with customer specifications. All this makes us a reliable supplier and development partner.

Comprehensive services complete our offering: SICK LifeTime Services provide support throughout the machine life cycle and ensure safety and productivity.

**For us, that is “Sensor Intelligence.”**

# WORLDWIDE PRESENCE:

Contacts and other locations –www.sick.com