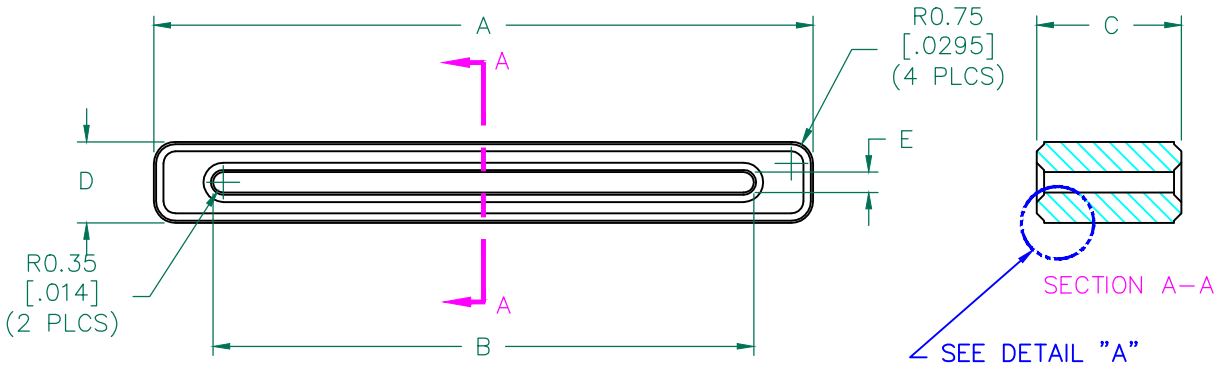

IMPEDANCE (Z)			
Frequency	25 MHz	100 MHz	300 MHz
Nominal (REF)	25 Ω	80 Ω	220 Ω
Minimum	- Ω	64 Ω	- Ω

Z vs. FREQUENCY
(REF. ONLY)

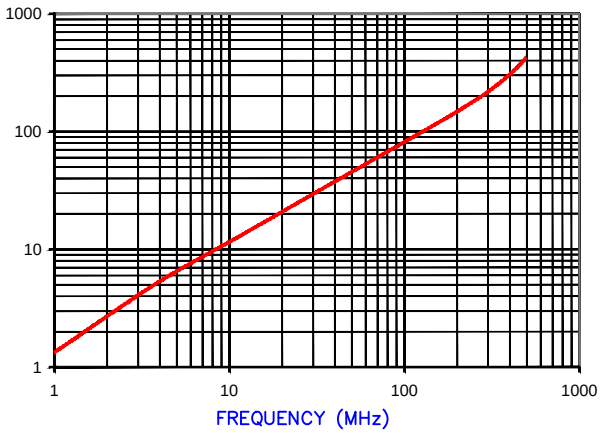

AGILENT E4991A Impedance/Material Analyzer
HP 16092A-Test Fixture

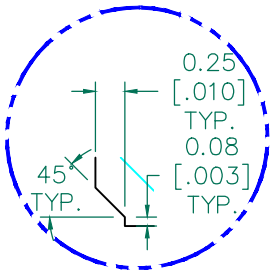

DETAIL "A"
CHAMFER
SCALE=16:1

FERRITE CORE DIMENSIONS (SPEC): mm [in]

A	22.80 [.898]	±	0.34 [.013]
B	18.70 [.736]	±	0.28 [.011]
C	5.00 [.197]	±	0.20 [.008]
D	2.80 [.110]	±	0.20 [.008]
E	0.70 [.028]	±	0.15 [.006]

WEIGHT/1000 1.20 kgs [2.65 Lbs]

NOTES: UNLESS OTHERWISE SPECIFIED

1. COSMETIC SPECIFICATION REFER TO WI–QA–038.

SCALE DRAWING 1:1



28R0898–000

REV	DESCRIPTION	DATE	INT
D	UPDATE THE LOGO AND THE NOTES	03/15/19	WS
C	RE–ACTIVATE PRINT,UPDATE COMPANY LOGO, CHG C DIMS FROM 6.00 CHG Z SPEC @ 100 MHZ	12/20/07	JRK
B	CHANGE PRINT FORMAT CHANGE Z SPECS	05/15/03	TMB
A	ORIGINAL DRAFT	10/17/02	TMB

DIMENSIONS ARE IN mm[INCHES].

This print is the property of Laird Tech. and is loaned in confidence subject to return upon request and with the understanding that no copies shall be made without the written consent of Laird Tech. All rights to design or invention are reserved.

Laird

PROJECT/PART NUMBER:	REV	PART TYPE:	DRAWN BY:
28R0898–000	D	FERRITE RIBBON CORE	WS

DATE:	SCALE:	MATERIAL:
03/15/19	4 : 1	NiZn Ferrite

CAD #	TOOL #
28R0898–000–D	R0898