RFMi
BRAND OF AKOUSTIS

RoHS compliant

CDR5000

5825 MHz Ceramic Filter

Package Dimensions
8.6 x 3.35 x 2.9 mm

ELECTRICAL CHARACTERISTICS:

This filter satisfies Table 1 at Temperature Range : -40 to +85℃

CENTER FREQUENCY :fo=5825 MHz

PASSBAND WIDTH :5725~5925 MHz

INPUT/OUTPUT IMPEDANCE :50Ω

Max. INPUT POWER : 1 W

MOISTURE SENSITVITY LEVEL: 2A

TABLE 1

NO.	ITEM		SPECIFICATION		
			Min	Typ	Max
1	PASS BAND INSERTION LOSS			1.0 dB	1.5 dB
2	PASS BAND RIPPLE			1.0 dB	1.2 dB
3	PASS BAND RETURN LOSS		10 dB	12 dB	
4	STOP—BAND ATTENUATION	at 4995 MHz	35 dB	37 dB	
Item NO.4 specifies the absolute value of attenuation.					

© 2020 by RFM Integrated Device, Inc.

TYPICAL ELECTRICAL CHARACTERISTICS

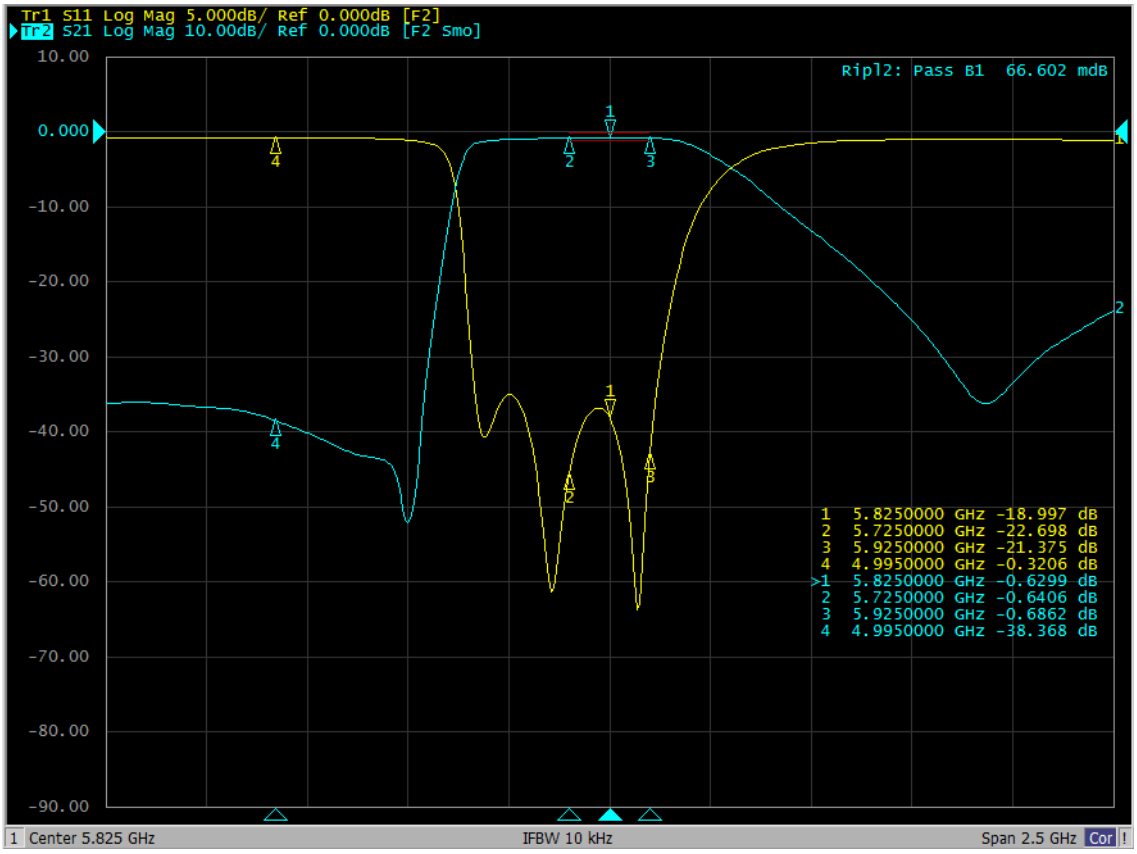

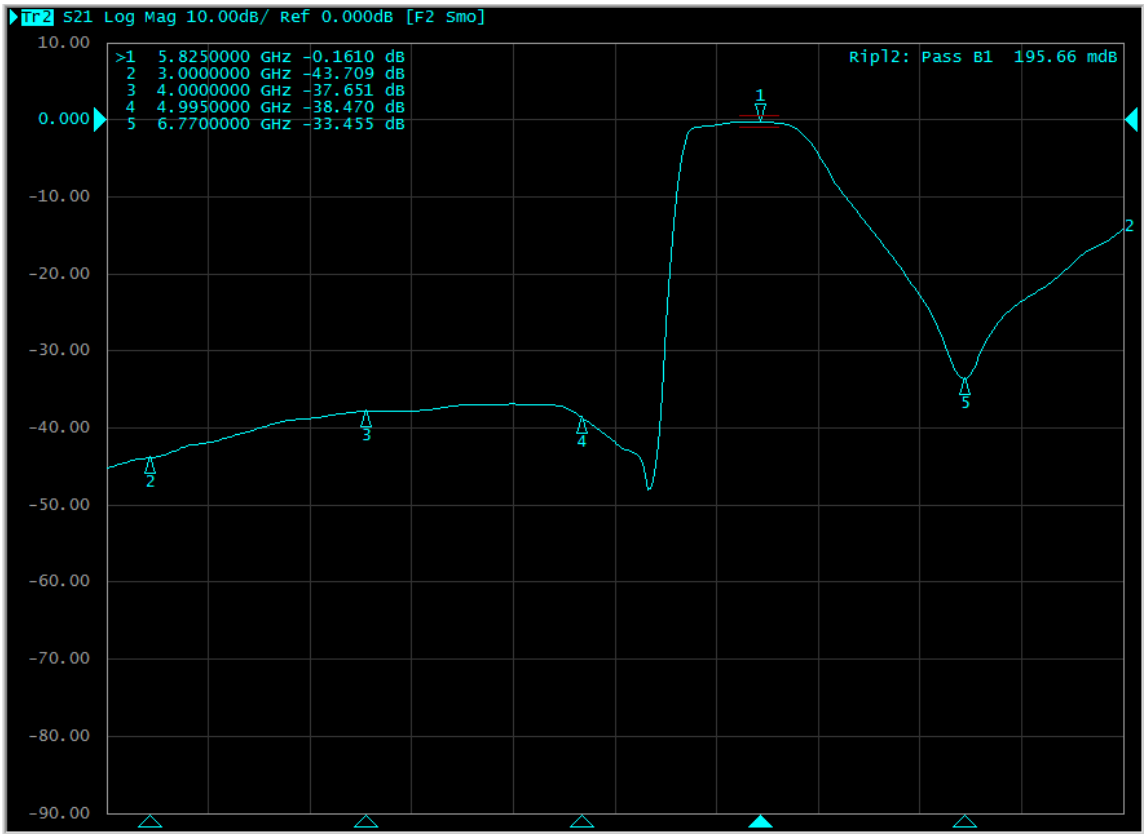

© 2020 by RFM Integrated Device, Inc.

2. Recommended Reflow Soldering Profile

The products can be assembled following Pb-free assembly. According to the Standard **IPC/ JEDEC J-STD-020C**, the temperature profile suggested is as follow:

Phase	Profile features	Pb-Free Assembly (SnAgCu)
PREHEAT	-Temperature Min(Tsmin) -Temperature Max(Tsmax) -Time(ts) form (Tsmin to Tsmax)	150℃ 200℃ 60-120 seconds
RAMP-UP	Avg. Ramp-up Rate (Tsmax to TP)	3℃/second(max)
REFLOW	-Temperature(TL) -Total Time above TL (t L)	217℃ 30-100 seconds
PEAK	-Temperature(TP) -Time(tp)	260℃ 3 second
RAMP-DOWN	Rate	6℃ / second max.
Time from 25℃ to Peak Temperature		8 minutes max.
Composition of solder paste		96.5Sn/3Ag/0.5Cu
Solder Paste Model		SHENMAO PF606-P26

Note：All the temperature measure point is on top surface of the component, if temperature over recommend, it will make component surface peeling or damage.

The graphic shows temperature profile for component assembly process in reflow ovens

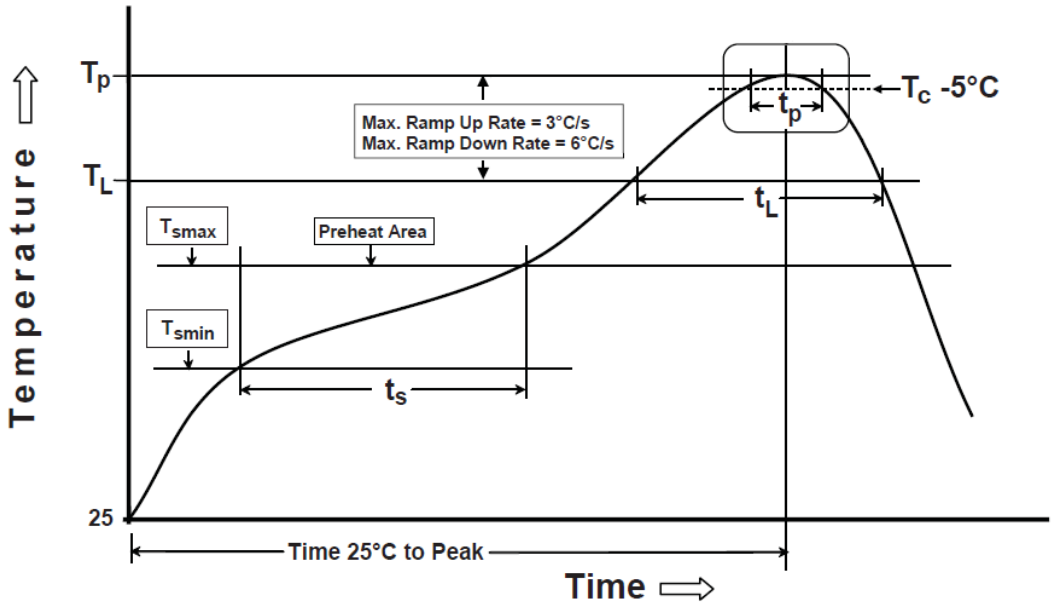

Soldering With Iron:

Soldering condition : Soldering iron temperature 270±10 ℃.

Apply preheating at 120℃ for 2-3 minutes. Finish soldering for each terminal within 3 seconds, if soldering iron over temperature 270±10 ℃ or 3 seconds, it will make component surface peeling or damage.

Soldering iron can not leakage of electricity.

© 2020 by RFM Integrated Device, Inc.

3.DIMENSION AND PCB LAYOUT

3-1-1 SHAPE AND DIMENSION

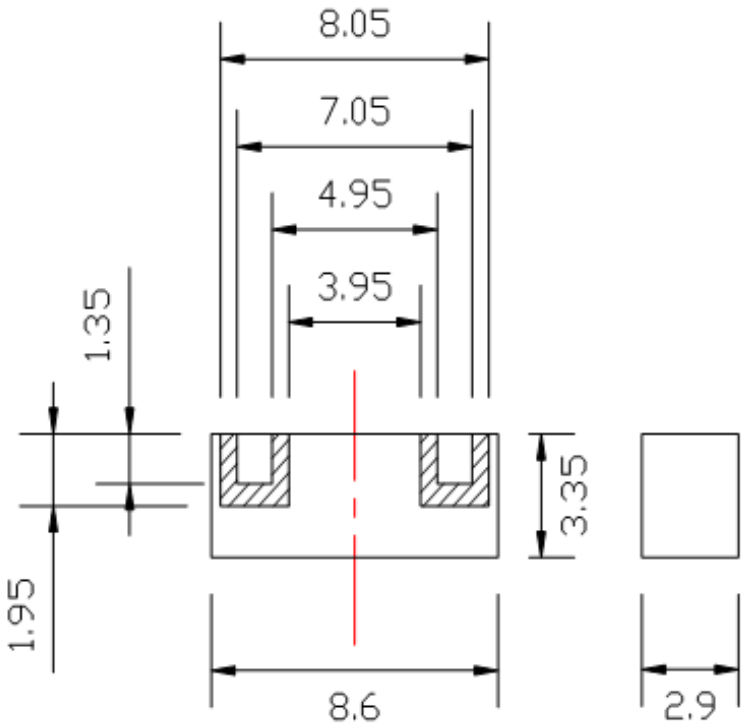

Dimensions in mm
Tolerance : ±0.25

3-1-2 MARKING

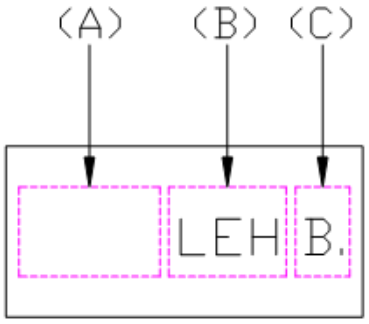

Product name : LEH for 5825H
B. = Year/Month : Please refer to the Table-1

(Table-1)

Year	Month	Code	Year	Month	Code	Year	Month	Code	Year	Month	Code
2012 2016 2020 2024	1	A	2013 2017 2021 2025	1	N	2014 2018 2022 2026	1	A .	2015 2019 2023 2027	1	N .
	2	B		2	P		2	B .		2	P .
	3	C		3	Q		3	C .		3	Q .
	4	D		4	R		4	D .		4	R .
	5	E		5	S		5	E .		5	S .
	6	F		6	T		6	F .		6	T .
	7	G		7	U		7	G .		7	U .
	8	H		8	V		8	H .		8	V .
	9	J		9	W		9	J .		9	W .
	10	K		10	X		10	K .		10	X .
	11	L		11	Y		11	L .		11	Y .
	12	M		12	Z		12	M .		12	Z .

© 2020 by RFM Integrated Device, Inc.

3-2 PCB RECOMMENDED PATTERN FOR FILTER

3-2-1
Conductive Material
Patten

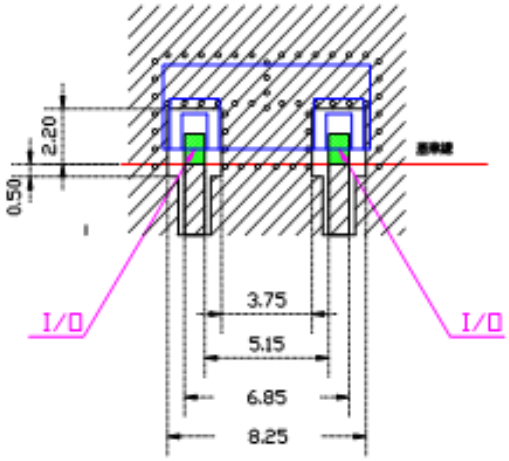

3-2-2
Solder resist
Patten

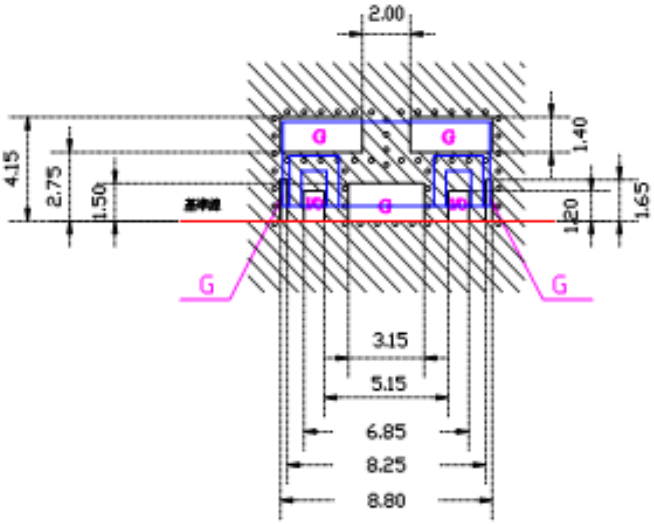

Filter outline

Via hole

Electrode

Solder Resist

Solder LAND

Tolerance:±0.2
I/O:Input/Output
G:Ground

I/O Pads must be connected to lineswith 50Ω impedance.
in the application a termination of 50Ω must be realized.

3-3 Delivery mode

3-3-1 Carrier tape

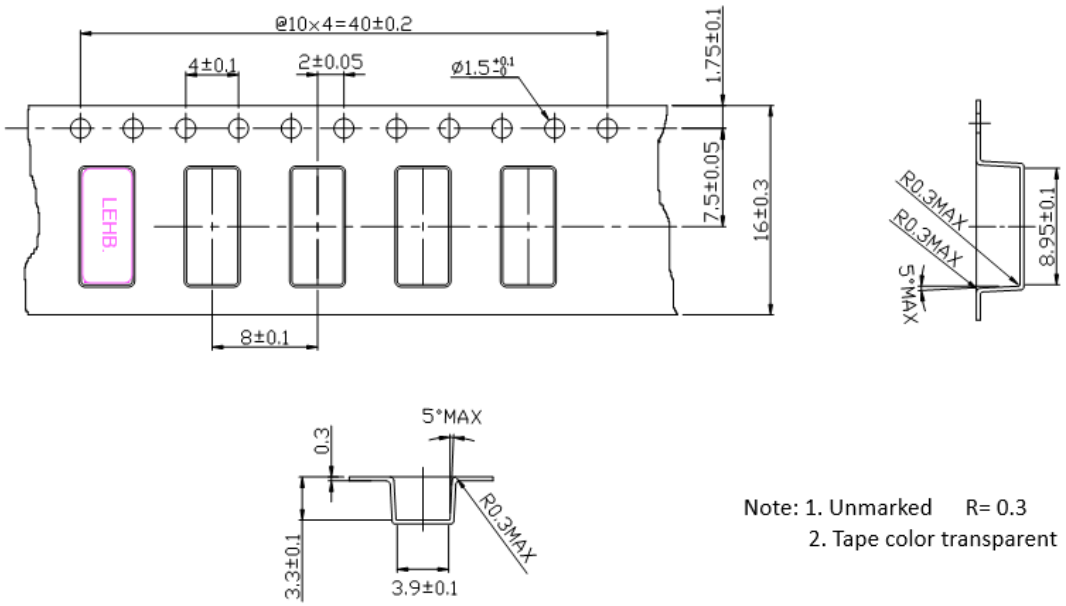

Note: 1. Unmarked R= 0.3
2. Tape color transparent

3-3-2 Reel

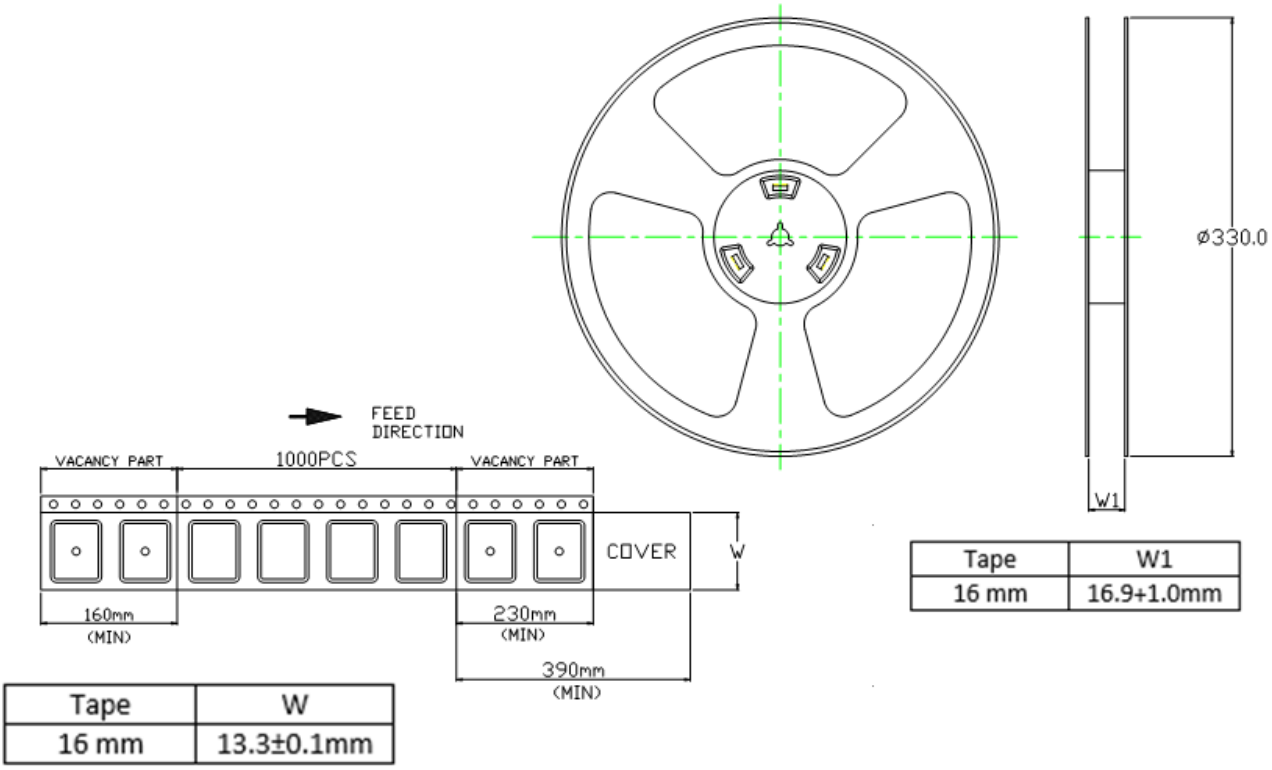

Tape	W
16 mm	13.3±0.1mm

Tape	W1
16 mm	16.9+1.0mm

CAUTION: Electrostatic Sensitive Device. Observe precautions for handling.

NOTES:

1. The design, manufacturing process, and specifications of this device are subject to change.
2. US or International patents may apply.
3. RoHS compliant from the first date of manufacture.

© 2020 by RFM Integrated Device, Inc.