# PLT-SEC-T3-24-FM-UT - Type 3 surge protection device

2907916

https://www.phoenixcontact.com/us/products/2907916

Please be informed that the data shown in this PDF document is generated from our online catalog. Please find the complete data in the user documentation. Our general terms of use for downloads are valid.



Type 3 surge protection, consisting of protective plug and base element, with integrated status indicator and remote signaling for single-phase power supply networks. Nominal voltage: 24 V AC/DC

## Your advantages

- Surge protection family for universal use with optimum energy coordination from the lightning current arrester to the device protection
- Easy to maintain due to consistently pluggable protection modules
- Excellent level of information provided by mechanical/visual status indicator and remote indication contact
- Your preferred connection technology can be selected as both screw connection and Push-in connection are available
- Optimal additional protection of the industrial power supply for a longer service life and increased availability of the system

## Commercial data

| | |
|---|---|
| Item number | 2907916 |
| Packing unit | 5 pc |
| Minimum order quantity | 5 pc |
| Sales key | CL19 |
| Product key | CL14A2 |
| Catalog page | Page 82 (C-4-2019) |
| GTIN | 4055626257419 |
| Weight per piece (including packing) | 94.49 g |
| Weight per piece (excluding packing) | 81.16 g |
| Customs tariff number | 85363030 |
| Country of origin | DE |

# PLT-SEC-T3-24-FM-UT - Type 3 surge protection device

2907916

https://www.phoenixcontact.com/us/products/2907916

## Technical data

### Product properties

| | |
|---|---|
| Product type | Device protection |
| Product family | SEC Family |
| IEC power supply system | TN-S |
| Type | DIN rail module, two-section, divisible |
| Number of positions | 2 |
| Surge protection fault message | Optical, remote indicator contact |

Insulation characteristics

| | |
|---|---|
| Overvoltage category | III |
| Pollution degree | 2 |
| IEC test classification | III |
| | T3 |
| EN type | T3 |
| Number of ports | One |

### Electrical properties

Indicator/remote signaling

| | |
|---|---|
| Connection name | Remote fault indicator contact |
| Switching function | Changeover contact |
| Operating voltage | 250 V AC |
| | 125 V DC (200 mA DC) |
| Operating current | 0.5 A AC |
| | 0.5 A DC (75 V DC) |

### Connection data

| | |
|---|---|
| Connection method | Screw connection |
| Screw thread | M3 |
| Tightening torque | 0.5 Nm |
| Conductor cross section flexible | 0.2 mm² ... 2.5 mm² |
| Conductor cross section rigid | 0.2 mm² ... 4 mm² |
| Conductor cross section AWG | 24 ... 12 |

### Dimensions

| | |
|---|---|
| Dimensional drawing | 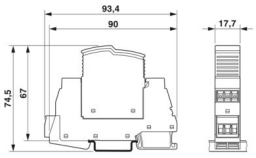 |
| Width | 17.7 mm |
| Height | 93.4 mm |

| | |
|---|---|
| Depth | 74.5 mm (incl. DIN rail 7.5 mm) |
| Horizontal pitch | 1 Div. |

## Material specifications

| | |
|---|---|
| Color (Male connector) | light grey (RAL 7035) |
| Color (Base element) | gray (RAL 7042) |
| Flammability rating according to UL 94 | V-0 |
| CTI value of material | 600 |
| Insulating material | PA 6.6-FR 20 % GF |
| | PA 6.6-FR |
| Housing material | PA 6.6-FR 20 % GF |
| | PA 6.6-FR |

## Protective circuit

| | |
|---|---|
| Mode of protection | L-N |
| | L-PE |
| | N-PE |
| Direction of action | 1L-N & N-PE |
| Nominal voltage $U_N$ | 24 V AC (TN-S) |
| Nominal frequency $f_N$ | 50 Hz (60 Hz) |
| Maximum continuous voltage $U_C$ | 34 V AC |
| Rated load current $I_L$ | 26 A (at 30 °C) |
| Residual current $I_{PE}$ | ≤ 5 µA |
| Standby power consumption $P_C$ | ≤ 2.70 mVA (at $U_{REF}$) |
| | ≤ 4.80 mVA (at $U_C$) |
| Reference test voltage $U_{REF}$ | 27.00 V AC |
| Nominal discharge current $I_n$ (8/20) µs | 1 kA |
| Combination wave $U_{OC}$ | 2 kV |
| Voltage protection level $U_p$ (L-N) | ≤ 0.2 kV |
| Voltage protection level $U_p$ (L-PE) | ≤ 0.6 kV |
| Voltage protection level $U_p$ (N-PE) | ≤ 0.6 kV |
| TOV behavior at $U_T$ (L-N) | 50 V AC (120 min / withstand mode) |
| TOV behavior at $U_T$ (L-PE) | 50 V AC (120 min / withstand mode) |
| Response time $t_A$ (L-N) | ≤ 25 ns |
| Response time $t_A$ (L-PE) | ≤ 100 ns |
| Response time $t_A$ (N-PE) | ≤ 100 ns |
| Short-circuit current rating $I_{SCCR}$ | 10 kA AC |
| Max. backup fuse with branch wiring | 32 A (gG / B / C) |

### Additional technical data

| | |
|---|---|
| Short-circuit current rating $I_{SCCR}$ | 0.25 kA DC (Without additional backup fuse in the DC branch wiring) |
| | 5 kA DC (for 20 A gG / B backup fuse) |
| Maximum discharge current $I_{max}$ (8/20) µs | 4 kA |
| Nominal discharge current $I_n$ (8/20) µs | 3 kA |

| | |
|---|---|
| Residual voltage $U_{res}$ (L-N) | ≤ 0.16 kV (at 0.5 kA) |
| | ≤ 0.2 kV (at 1 kA) |
| Residual voltage $U_{res}$ (L-PE) | ≤ 0.35 kV (at 0.5 kA) |
| | ≤ 0.4 kV (at 1 kA) |
| Residual voltage $U_{res}$ (N-PE) | ≤ 0.35 kV (at 0.5 kA) |
| | ≤ 0.4 kV (at 1 kA) |
| Maximum continuous voltage $U_C$ | 44 V DC |
| Mode of protection | (DC+) - (DC-) |
| | (DC+/DC-) - PE |

## Environmental and real-life conditions

### Ambient conditions

| | |
|---|---|
| Degree of protection | IP20 |
| Ambient temperature (operation) | -40 °C ... 80 °C |
| Ambient temperature (storage/transport) | -40 °C ... 80 °C |
| Altitude | ≤ 2000 m (operating voltage remote contact ≤ 250 V) |
| | ≤ 6000 m (operating voltage remote contact ≤ 150 V) |
| Permissible humidity (operation) | 5 % ... 95 % |
| Shock (operation) | 30g (Half-sine / 11 ms / 3x ±X, ±Y, ±Z) |
| Vibration (operation) | 5g (5 ... 500 Hz / 2.5 h / X, Y, Z) |

## Approvals

### UL specifications

| | |
|---|---|
| Maximum continuous operating voltage MCOV | 34 V AC |
| | 34 V DC |
| Nominal discharge current $I_n$ | 1 kA |
| Mode of protection | L-N |
| | L-G |
| | N-G |
| | (DC+) - (DC-) |
| | (DC+) - G |
| | (DC-) - G |
| Nominal voltage | 34 V DC |
| Rated load current $I_L$ | 20 A |
| Power distribution system | Single phase |
| | DC |
| Nominal frequency | 50/60 Hz |
| Measured limiting voltage MLV (L-N) | 200 V |
| Measured limiting voltage MLV (L-G) | 510 V |
| Measured limiting voltage MLV (N-G) | 510 V |
| SPD Type | 4CA |

### UL indicator/remote signaling

| | |
|---|---|
| Operating voltage | 250 V AC (0.5 A) |

| | |
|---|---|
| DC operating voltage | 12 V DC (4 A) |
| | 24 V DC (2 A) |
| | 48 V DC (1 A) |

UL connection data

| | |
|---|---|
| Tightening torque | 4.4 $lb_f$-in. |
| Conductor cross section AWG | 16 ... 12 |

## Standards and regulations

| | |
|---|---|
| Standards/specifications | IEC 61643-11 |
| Note | 2011 |

EN 61643-11

| | |
|---|---|
| Standards/specifications | EN 61643-11 |
| Note | 2012 |

## Mounting

| | |
|---|---|
| Mounting type | DIN rail: 35 mm |

## Drawings

Circuit diagram

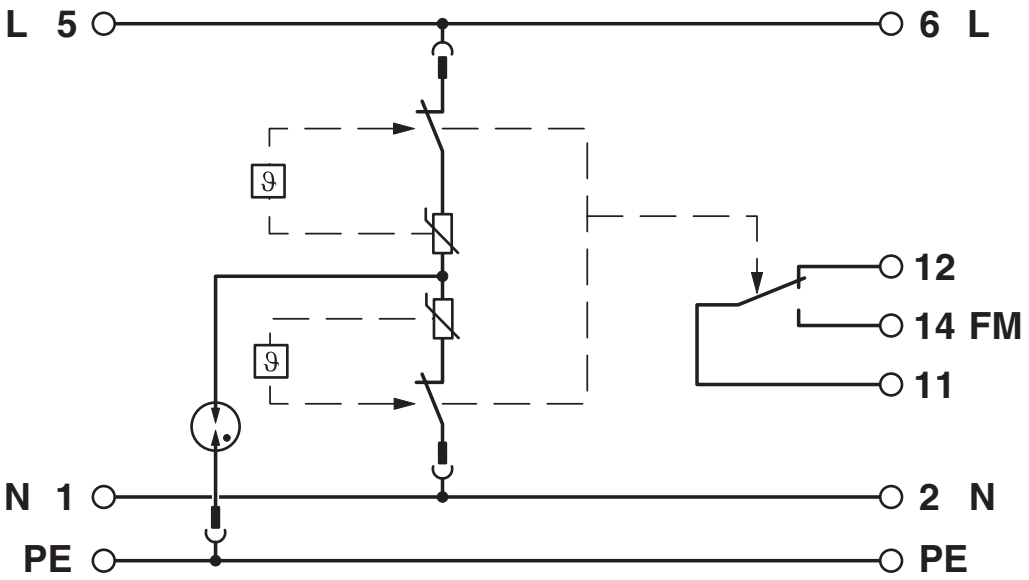


Dimensional drawing

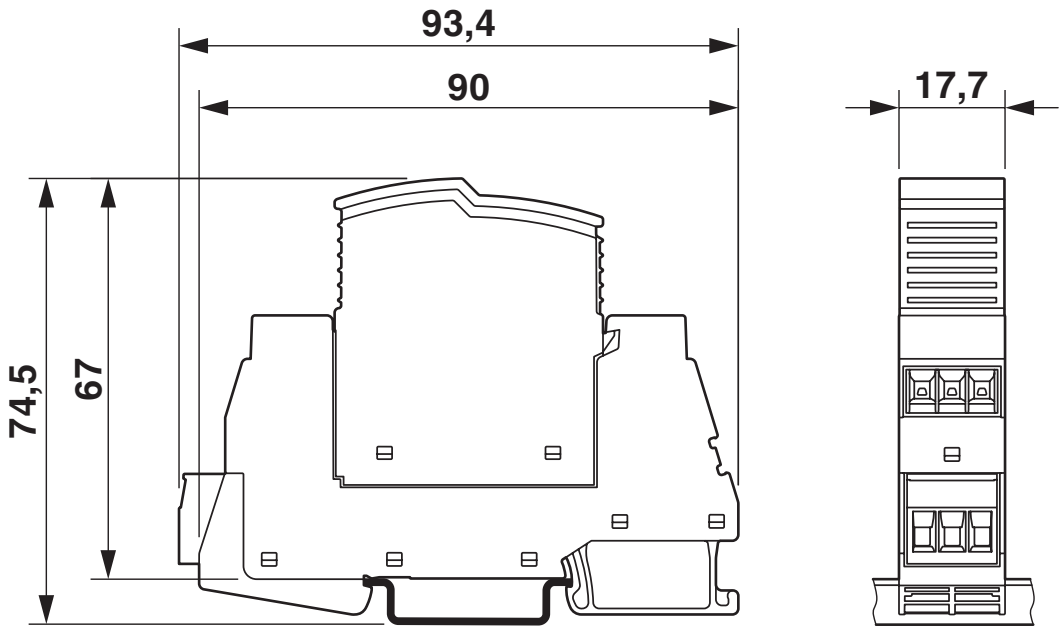

Diagram

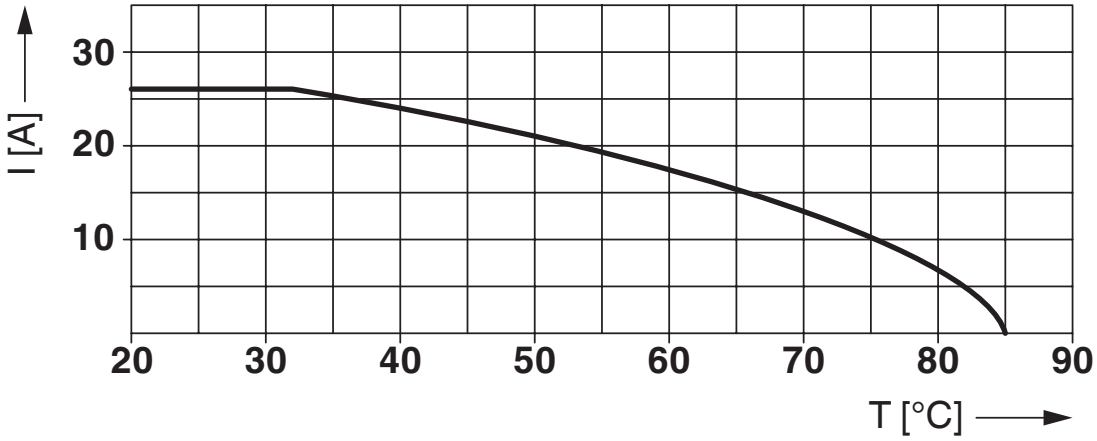


Nominal current depending on ambient temperature

# PLT-SEC-T3-24-FM-UT - Type 3 surge protection device

2907916

https://www.phoenixcontact.com/us/products/2907916

Product drawing

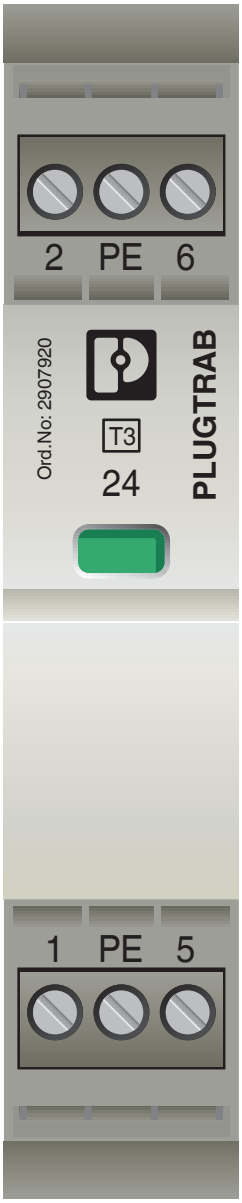

## Approvals

To download certificates, visit the product detail page: https://www.phoenixcontact.com/us/products/2907916

**cUL Recognized**
Approval ID: FILE E 330181

**UL Recognized**
Approval ID: FILE E 330181

**IECEE CB Scheme**
Approval ID: NL-51083

**EAC**
Approval ID: RU C-DE.*09.B.00169

**CCA**
Approval ID: NTR-NL 7676

**KEMA-KEUR**
Approval ID: 71-103027

**UAE-RoHS**
Approval ID: 23-10-88891

**DNV**
Approval ID: TAE00002U7

**cUL Recognized**
Approval ID: FILE E 340736

**UL Recognized**
Approval ID: FILE E 340736

**cULus Recognized**

cULus Recognized

## Classifications

### ECLASS

| | |
|---|---|
| ECLASS-11.0 | 27130806 |
| ECLASS-13.0 | 27171203 |

### ETIM

| | |
|---|---|
| ETIM 9.0 | EC000942 |

### UNSPSC

| | |
|---|---|
| UNSPSC 21.0 | 39121600 |

## Environmental product compliance

EU RoHS

| | |
|---|---|
| Fulfills EU RoHS substance requirements | Yes, No exemptions |

China RoHS

| | |
|---|---|
| Environment friendly use period (EFUP) | EFUP-E |
| | No hazardous substances above the limits |

EU REACH SVHC

| | |
|---|---|
| REACH candidate substance (CAS No.) | No substance above 0.1 wt% |

## Accessories

### CLIPFIX 35 - End bracket

3022218

https://www.phoenixcontact.com/us/products/3022218



Quick mounting end clamp for NS 35/7,5 DIN rail or NS 35/15 DIN rail, with marking option, width: 9.5 mm, color: gray

### EML (20XE)R - Label

0803452

https://www.phoenixcontact.com/us/products/0803452



Label, Roll, white, unlabeled, can be labeled with: THERMOMARK E.300 (D)/600 (D), THERMOMARK ROLL 2.0, THERMOMARK ROLL, THERMOMARK ROLL X1, THERMOMARK ROLLMASTER 300/600, THERMOMARK X1.2, mounting type: adhesive, lettering field size: continuous x 20 mm, Number of individual labels: 1

## EML (20XE)R YE - Label

0803453

https://www.phoenixcontact.com/us/products/0803453



Label, Roll, yellow, unlabeled, can be labeled with: THERMOMARK E.300 (D)/600 (D), THERMOMARK ROLL 2.0, THERMOMARK ROLL, THERMOMARK ROLL X1, THERMOMARK ROLLMASTER 300/600, THERMOMARK X1.2, mounting type: adhesive, lettering field size: continuous x 20 mm, Number of individual labels: 1

## X-PEN 0,35 - Marker pen

0811228

https://www.phoenixcontact.com/us/products/0811228



Marker pen without ink cartridge, for manual labeling of markers, labeling extremely wipe-proof, line thickness 0.35 mm

## SZS 0,6X3,5 VDE - Screwdriver

1212602

https://www.phoenixcontact.com/us/products/1212602



Screwdriver, slot-headed, VDE insulated, size: 0.6 x 3.5 x 100 mm, 2-component grip, with non-slip grip

## SZS 0,4X2,5 VDE - Screwdriver

1205037

https://www.phoenixcontact.com/us/products/1205037



Screwdriver, slot-headed, VDE insulated, size: 0.4 x 2.5 x 80 mm, 2-component grip, with non-slip grip

# PLT-SEC-T3-24-FM-UT - Type 3 surge protection device

2907916

https://www.phoenixcontact.com/us/products/2907916

## PLT-SEC-T3-24-P-UT/PT - Type 3 surge protection plug

2907920

https://www.phoenixcontact.com/us/products/2907920



Replacement plug for type 3 surge protection from the PLT-SEC-...-UT/PT product series. Nominal voltage 24 V.

## PLT-SEC-T3-BE-FM-UT - Type 3 surge protection base element

2907924

https://www.phoenixcontact.com/us/products/2907924

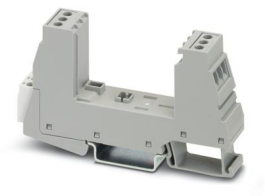

Base element for protective plugs from the PLT-SEC-...-UT/PT product series with remote indication contact.

Phoenix Contact 2024 © - all rights reserved
https://www.phoenixcontact.com

Phoenix Contact USA
586 Fulling Mill Road
Middletown, PA 17057, United States
(+717) 944-1300
info@phoenixcon.com