Surge Protective Devices
SPD2 PV SERIES

Class 2 (IEC)/Type 2 (EN)/Type 1CA (UL) Pluggable Multi-Pole for PV Systems

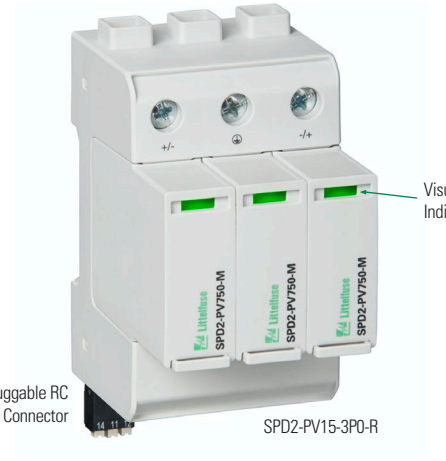

Internal Configuration

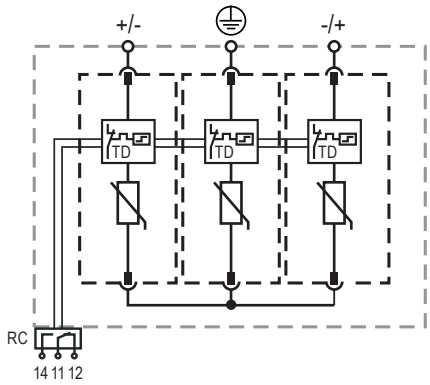

Legend

⏚ *Protective Earth*
RC *Optional Remote Contact*
TD *Thermal Disconnection*

Description

Surge protective devices (SPDs) provide equipment protection from transient overvoltage events lasting micro-seconds. By limiting the overvoltage to the equipment during these events, costly damage and downtime can be mitigated.

The surge protective devices for solar string box and inverter applications are available in 1100 and 1500 V dc in the 3+0 configuration.

Features & Benefits

FEATURES	BENEFITS
Capability to clamp and withstand high-energy transients	Ensures low-residual voltage during high-energy surge events and higher nominal discharge current to prevent disruption, downtime, and degradation or damage to equipment
No additional overcurrent protection devices required in UL applications	Reduces the number of components and costs required for protection
Compact footprint	Increases panel design flexibility
Visual life indicator	Quick visual determines module replacement status to avoid loss of protection
Pluggable modules	Fast and simple to replace, minimizing maintenance and downtime. No tools required
Thermal protection	Eliminates catastrophic failure
IP20 protection rating	Finger-safe design increases worker protection

Module & Base Ordering Information

Ordering Number	IEC Electrical						UL Electrical				Single Unit Weight
	Maximum Continuous Operating Dc Voltage (U_{CPV})	Nominal Discharge Current (8/20 µs) (I_n)	Maximum Discharge Current (8/20 µs) (I_{max})	Total Discharge Current (I_{Total})	Voltage Protection Level (U_p)	Short-Circuit Current Rating (I_{SCPV})	Maximum Permitted Dc Voltage (I_{pvdc})	Voltage Protection Rating (VPR)	Nominal Discharge Current (8/20 µs) (I_n)	Short-Circuit Current Rating (SCCR)	
SPD2-PV11-3P0 SPD2-PV11-3P0-R	1100 V	20 kA	40 kA	50 kA	4200 V	9 kA	1100 V	3000 V	20 kA	50 kA	333 g (0.734 lb)
SPD2-PV15-3P0 SPD2-PV15-3P0-R	1500 V	15 kA	40 kA	40 kA	4800 V	9 kA	1500 V	4000 V	20 kA	65 kA	363 g (0.800 lb)

© 2020 Littelfuse, Inc.

Module & Base Part Numbering System

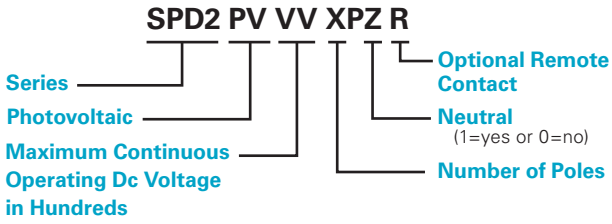

Module Only Part Numbering System



Replacement Module Ordering Information

Ordering Number	IEC Electrical						UL Electrical				Single Unit Weight
	Maximum Continuous Operating Dc Voltage (U_{CPV})	Nominal Discharge Current (8/20 µs) (I_n)	Maximum Discharge Current (8/20 µs) (I_{max})	Total Discharge Current (I_{Total})	Voltage Protection Level (U_p)	Short-Circuit Current Rating (I_{SCPV})	Maximum Permitted Dc Voltage (I_{pvdc})	Voltage Protection Rating (VPR)	Nominal Discharge Current (8/20 µs) (I_n)	Short-Circuit Current Rating (SCCR)	
SPD2-PV550-M	1100 V	20 kA	40 kA	50 kA	4200 V	9 kA	1100 V	3000 V	20 kA	50 kA	61 g (0.134 lb)
SPD2-PV750-M	1500 V	15 kA	40 kA	40 kA	4800 V	9 kA	1500 V	4000 V	20 kA	65 kA	71 g (0.157 lb)

Specifications

Mode of Protection (+) - PE, (-) - PE, (+) - (-)
Nominal Discharge Current (8/20 µs) (I_n) 20 kA
Maximum Discharge Current (8/20 µs) (I_{max}) Up to 40 kA
Protective Elements High Energy MOV
Response Time (t_A) < 25 ns
Number of Ports 1

Mechanical & Environmental

Operating Temperature Range (T_a) -40 °C to +80 °C (-40 °F to +185 °F)
Permissible Operating Humidity (RH) 5% to 95%
Altitude (max) 4,000 m (13,123 ft)
Terminal Screw Torque) (M_{max}) 4.5 Nm (39.9 lbf-in)
Conductor Cross Section (max) 35 mm² (2 AWG) (Solid, Stranded)/ 25 mm² (4 AWG) (Flexible)
Mounting 35 mm DIN Rail, EN60715
Degree of Protection IP20 (built-in)
Housing Material Thermoplastic: Extinguishing Degree UL 94 V-0
Thermal Protection Yes

Operating State/Fault Indication Green Flag/No Green Flag
Remote Contact Switching Capacity Ac: 250 V/1 A, 125 V/1 A; Dc: 48 V/0.5 A, 24 V/0.5 A, 12 V/0.5 A
Remote Contact Conductor Cross Section (max) 1.5 mm² (16 AWG) (Solid)
Standards Passed EN 50539-11:2013+A1:2014
UL 1449 4th Edition; E320116

Product Dimensions

3TE Module and Base **H** 90.7 mm (3.57"); **W** 53.8 mm (2.11"); **D** 66.1 mm (2.60")
1TE Replacement Module **H** 45.0 mm (1.77"); **W** 18.0 mm (0.71"); **D** 57.2 mm (2.25")

Package Dimensions

3TE Module and Base **H** 102.0 mm (4.01"); **W** 64.0 mm (2.52"); **D** 110.0 mm (4.33")
1TE Replacement Module **H** 102.0 mm (4.01"); **W** 28.0 mm (1.10"); **D** 110.0 mm (4.33")

Warranty – Visit **www.littelfuse.com/warranty** for details.

Disclaimer Notice – Information furnished is believed to be accurate and reliable. However, users should independently evaluate the suitability of and test each product selected for their own applications. Littelfuse products are not designed for, and may not be used in, all applications. Read complete Disclaimer Notice at **www.littelfuse.com/product-disclaimer.**

© 2020 Littelfuse, Inc.