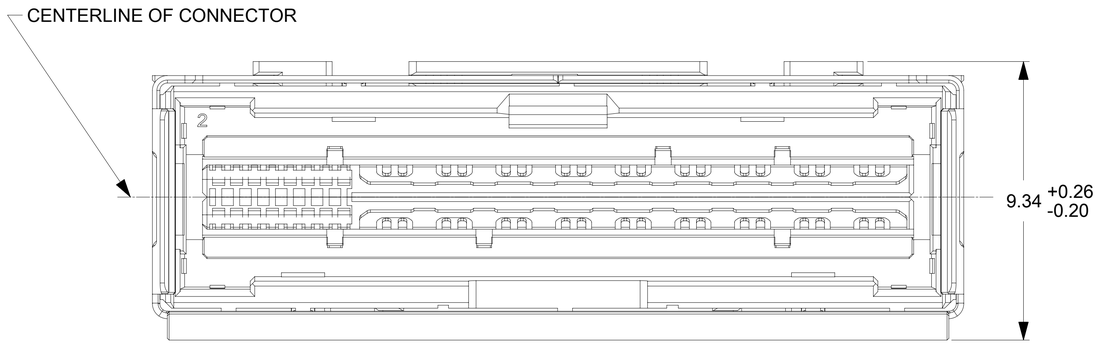

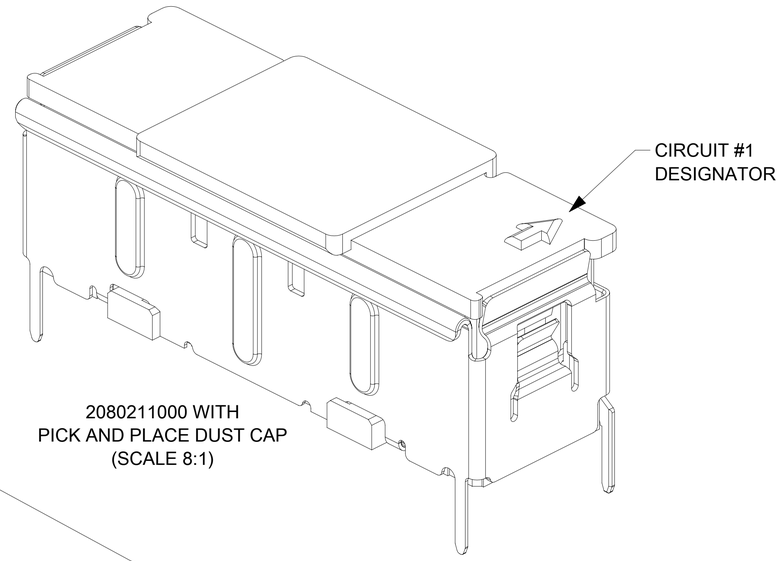

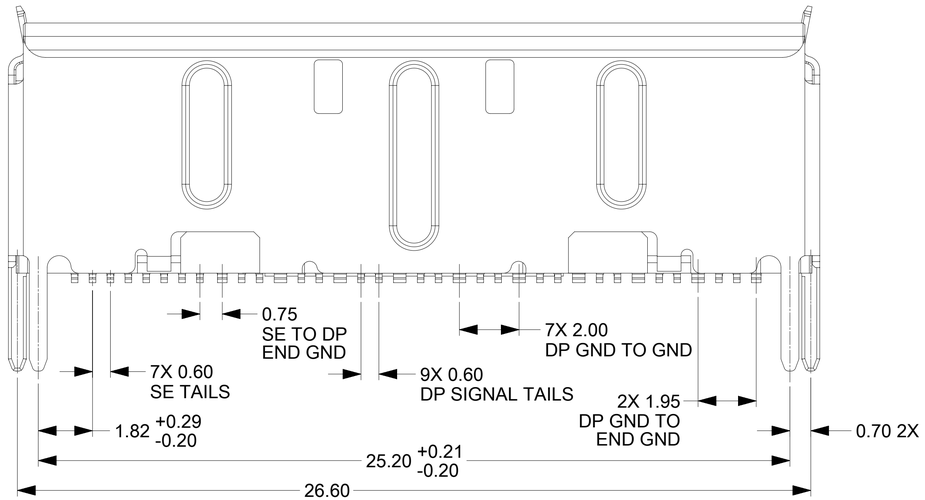

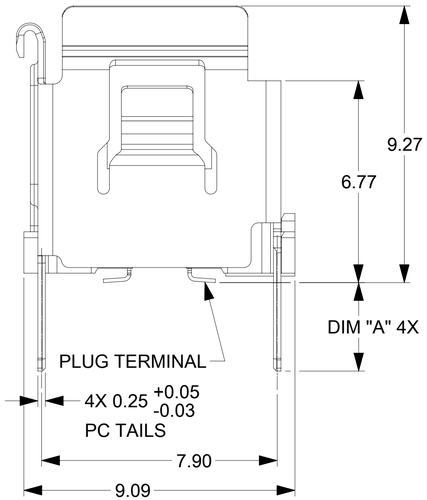

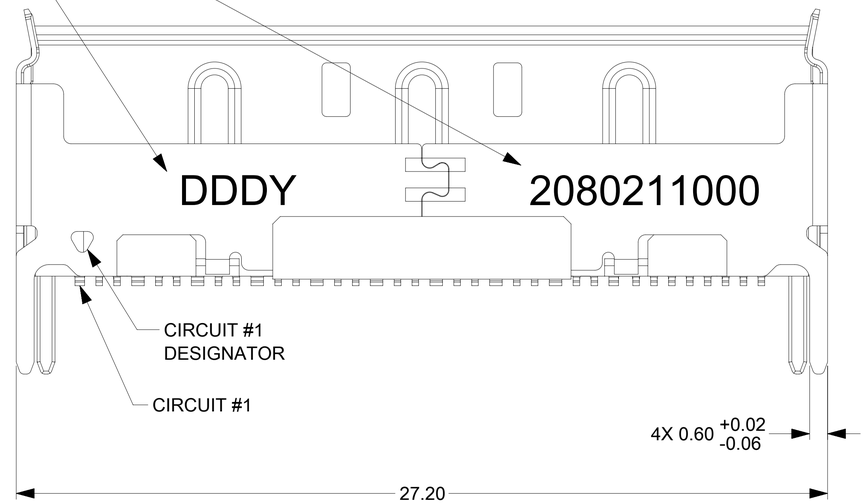

NOTES:

1. MATERIAL:
   HOUSING: LCP, GLASS FILLED, UL 94V-0 BLACK
   PICK AND PLACE DUST COVER: LCP, GLASS FILLED, UL 94V-0 NATURAL
   CONTACT: HIGH PERFORMANCE COPPER ALLOY
   CAN: STAINLESS STEEL
2. FINISH:
   CONTACT: 30 MICROINCHES (0.76 MICRONS) MIN SELECTIVE GOLD ON CONTACT AREA,
   1.97 -13.78 MICROINCHES (0.05 - 0.35 MICRONS) GOLD FLASH OVER 50 MICROINCHES
   (1.27 MICRONS) NICKEL MIN OVERALL.
   CAN: 1.25 MICRONS NICKEL MIN OVERALL
   CAN PC TAIL: 16-35 MICRONS HOT TIN DIP
3. PRODUCT SPECIFICATION: 2080210001-PS
4. PACKAGING SPECIFICATION: 2080219000
5. APPLICATION SPECIFICATION: 2080210001-AS
6. MATES TO NEARSTACK PCIe SERIES:
   RIGHT ANGLE: 216070, 216711, 219246, 219333, 220929, 220930, 216710, 220931, 220932
   ANGLE EXIT: 217033, 216720, 218800, 220933, 220934, 217268, 220935, 220936
   VERTICAL EXIT: 216644, 219345, 220254, 220753, 217575, 219344, 220265, 220754, 219687, 218411
7. MUST CONFORM TO THE COSMETIC SPECIFICATION: PS-45499-002, CLASS B; EXCEPT
   ANY IMPERFECTIONS MUST FIT WITHIN A 0.08mm DIAMETER SPHERE
   (DUE TO THE SMALL SIZE OF THIS PART).

PART NUMBER	DIM -A-
2080211000	2.96 mm
2080211100	1.50 mm

DOCUMENT STATUS	P1	RELEASE DATE	2023/05/05 17:38:08

THIS DRAWING CONTAINS INFORMATION THAT IS PROPRIETARY TO MOLEX ELECTRONIC TECHNOLOGIES, LLC AND SHOULD NOT BE USED WITHOUT WRITTEN PERMISSION

FUNCTIONAL SYMBOLS: FA = 0, FC = 0, FF = 0
DIVISIONAL SYMBOLS

DIMENSION UNITS	SCALE
mm	10:1

GENERAL TOLERANCES (UNLESS SPECIFIED)

ANGULAR TOL	± 0.5 °
4 PLACES	±
3 PLACES	±
2 PLACES	± 0.2
1 PLACE	±
0 PLACES	±

DRAFT WHERE APPLICABLE MUST REMAIN WITHIN DIMENSIONS

CURRENT REV DESC: UPDATE PER PCN 513324

EC NO: 748572
DRWN: TIBARRA 2022/11/14
CHK'D: MICAB 2023/05/05
APPR: TLAWRENCE 2023/05/05

INITIAL REVISION:
DRWN: TPREMO 2019/05/08
APPR: DMCGOWAN 2020/02/13

molex

PLUG, NEARSTACK PCIE 18DP & 16SE

PRODUCT CUSTOMER DRAWING

DOCUMENT NUMBER	DOC TYPE	DOC PART	REVISION
2080211000	PSD	000	E4

THIRD ANGLE PROJECTION	DRAWING	SERIES	MATERIAL NUMBER	CUSTOMER	SHEET NUMBER
	D-SIZE	208021	SEE TABLE	GENERAL MARKET	1 OF 5

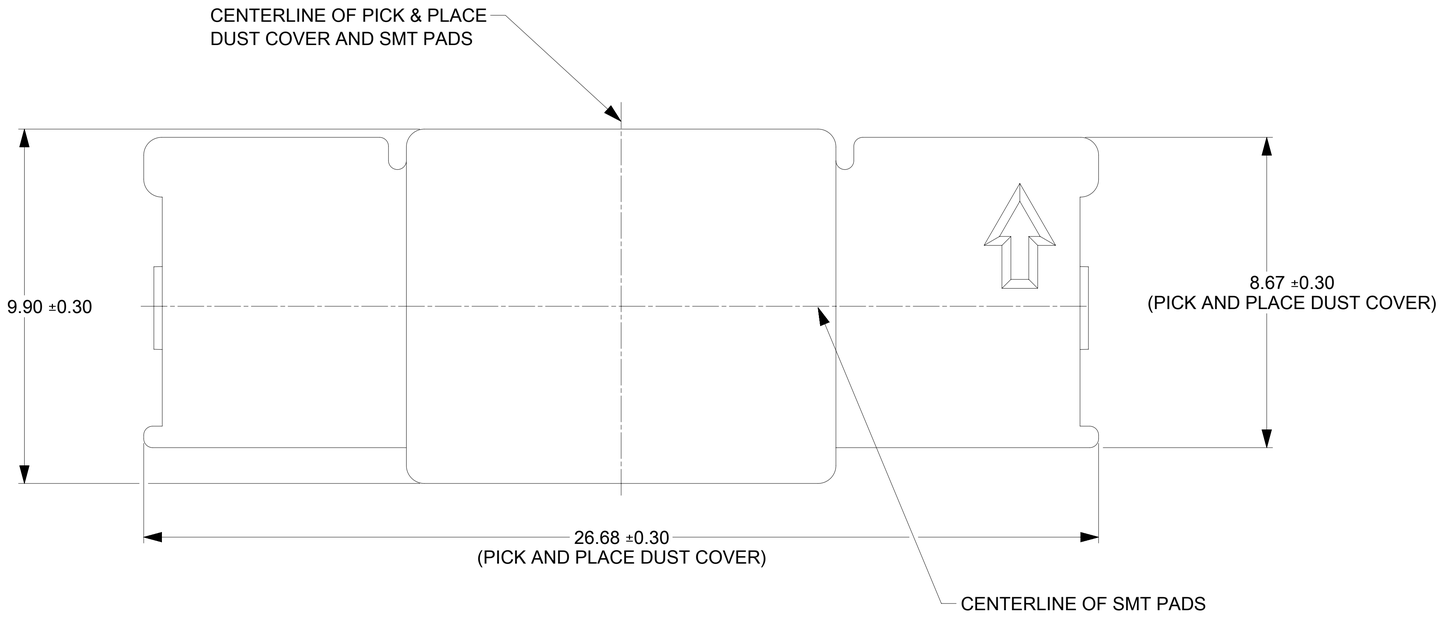

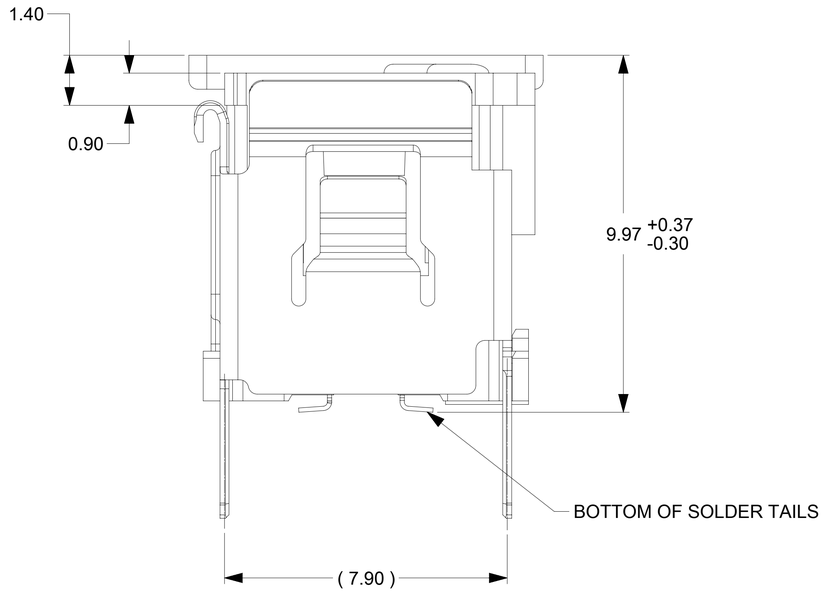

THIS DRAWING CONTAINS INFORMATION THAT IS PROPRIETARY TO MOLEX ELECTRONIC TECHNOLOGIES, LLC AND SHOULD NOT BE USED WITHOUT WRITTEN PERMISSION

FUNCTIONAL SYMBOLS	EA = 0; EC = 0; EP = 0
DIVISIONAL SYMBOLS	
DIMENSION UNITS	mm
SCALE	12:1
GENERAL TOLERANCES (UNLESS SPECIFIED)	
ANGULAR TOL	± 0.5 °
4 PLACES	±
3 PLACES	±
2 PLACES	± 0.2
1 PLACE	±
0 PLACES	±
DRAFT WHERE APPLICABLE MUST REMAIN WITHIN DIMENSIONS	
CURRENT REV DESC:	UPDATE PER PCN 513324
EC NO:	748572
DRWN:	TIBARRA 2022/11/14
CHK'D:	MICAB 2023/05/05
APPR:	TLAWRENCE 2023/05/05
INITIAL REVISION:	
DRWN:	TPREMO 2019/05/08
APPR:	DMCGOWAN 2020/02/13
THIRD ANGLE PROJECTION	
DRAWING	D-SIZE
SERIES	208021
MATERIAL NUMBER	SEE TABLE
CUSTOMER	GENERAL MARKET
SHEET NUMBER	2 OF 5

molex

PLUG, NEARSTACK PCIE 18DP & 16SE

PRODUCT CUSTOMER DRAWING

DOCUMENT NUMBER	DOC TYPE	DOC PART	REVISION
2080211000	PSD	000	E4

DOCUMENT STATUS	P1	RELEASE DATE	2023/05/05 17:38:08

CABLES EMERGE FROM THIS SIDE OF THE MATED CONNECTORS

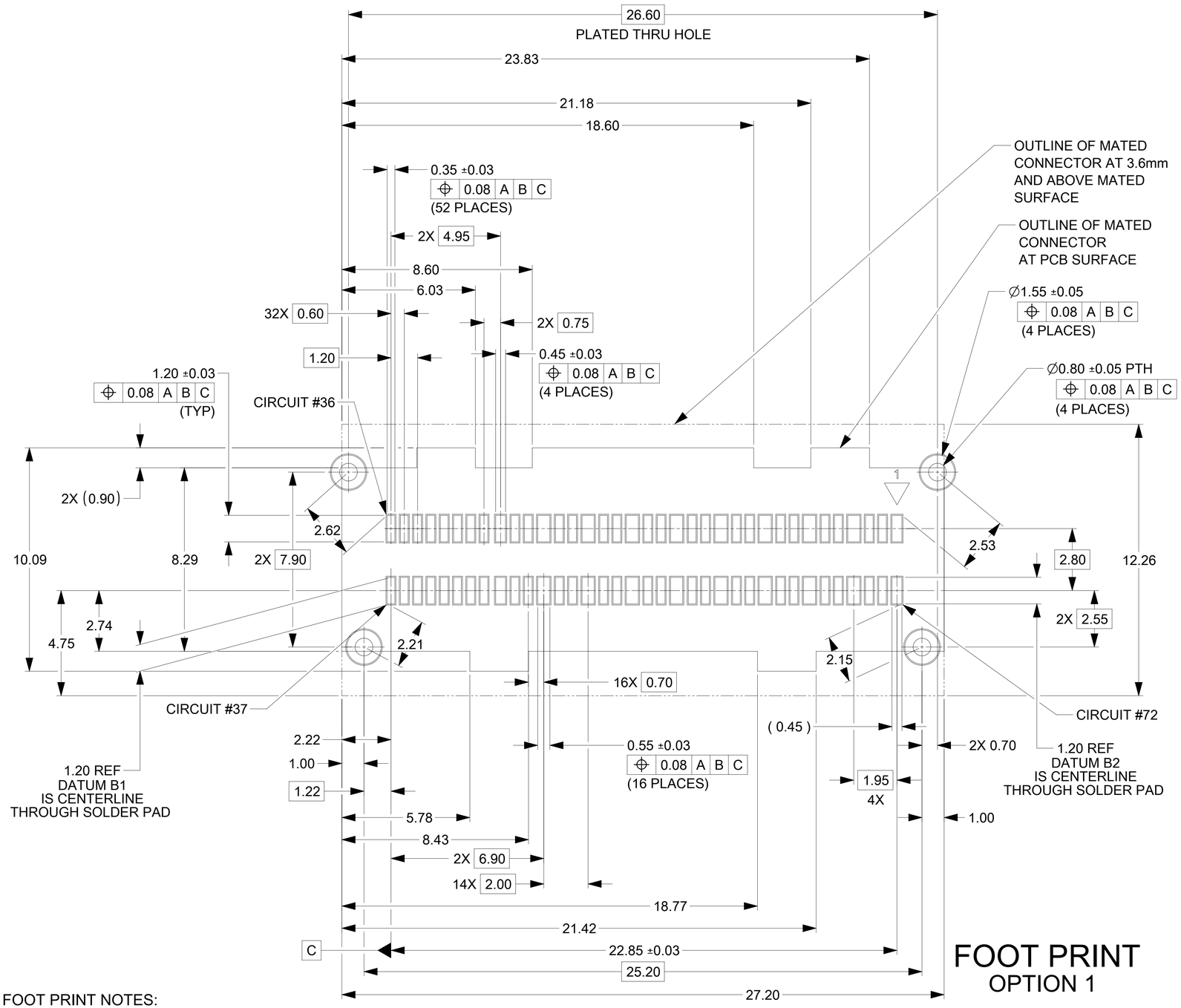

FOOT PRINT
OPTION 1

FOOT PRINT NOTES:
1. DATUM -A- IS THE TOP OF THE PCB.
2. PIN-IN-PASTE SOLDERING METHOD IS RECOMMENDED, INCLUDING THRU-HOLE CAN TAILS. CONSULT NEARSTACK PCIe APPLICATION SPECIFICATION 2080210001-AS FOR FURTHER DETAILS ON SMT SOLDERING PROCESS RECOMMENDATIONS.

SPACING RECOMMENDATIONS FOR MATING RECEPTACLE CABLE ASSEMBLIES SHOWN BELOW. CONSULT NEARSTACK PCIe DESIGN GUIDE 2080210002-AS FOR FURTHER DETAILS ON MINIMUM CONNECTOR SPACING.

MATING CABLE SERIES	DESCRIPTION	DIM "X"	DIM "Y"
216070	HORIZONTAL EXIT WITH PULL TAB	28.60	30.00
216710	HORIZONTAL EXIT NON-PULL TAB	34.50	30.00
217033	ANGLE EXIT WITH PULL TAB	28.60	15.00
217268	ANGLE EXIT NON-PULL TAB	34.50	15.00
216644	VERTICAL EXIT WITH PULL TAB	28.60	12.00

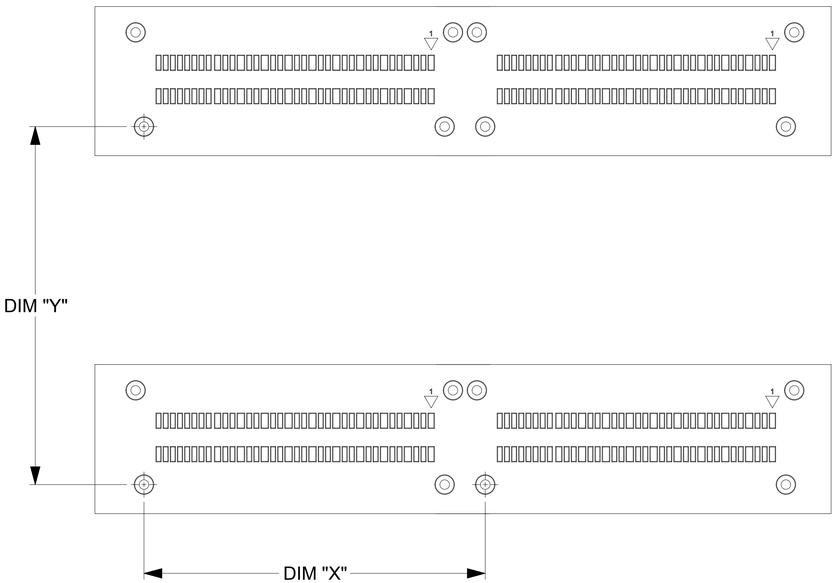

DOCUMENT STATUS	P1	RELEASE DATE	2023/05/05 17:38:08

FUNCTIONAL SYMBOLS: FA = 0; FC = 0; FP = 0
DIVISIONAL SYMBOLS

THIS DRAWING CONTAINS INFORMATION THAT IS PROPRIETARY TO MOLEX ELECTRONIC TECHNOLOGIES, LLC AND SHOULD NOT BE USED WITHOUT WRITTEN PERMISSION

DIMENSION UNITS: mm; SCALE: 10:1
GENERAL TOLERANCES (UNLESS SPECIFIED)
ANGULAR TOL ± 0.5 °
4 PLACES ±
3 PLACES ±
2 PLACES ± 0.2
1 PLACE ±
0 PLACES ±
DRAFT WHERE APPLICABLE MUST REMAIN WITHIN DIMENSIONS

CURRENT REV DESC: UPDATE PER PCN 513324
EC NO: 748572
DRWN: TIBARRA 2022/11/14
CHK'D: MICAB 2023/05/05
APPR: TLAWRENCE 2023/05/05
INITIAL REVISION:
DRWN: TPREMO 2019/05/08
APPR: DMCGOWAN 2020/02/13

THIRD ANGLE PROJECTION
DRAWING: D-SIZE
SERIES: 208021
MATERIAL NUMBER: SEE TABLE
CUSTOMER: GENERAL MARKET
SHEET NUMBER: 3 OF 5

molex

PLUG, NEARSTACK PCIE 18DP & 16SE

PRODUCT CUSTOMER DRAWING

DOCUMENT NUMBER	DOC TYPE	DOC PART	REVISION
2080211000	PSD	000	E4

CABLES EMERGE FROM THIS SIDE OF THE MATED CONNECTORS

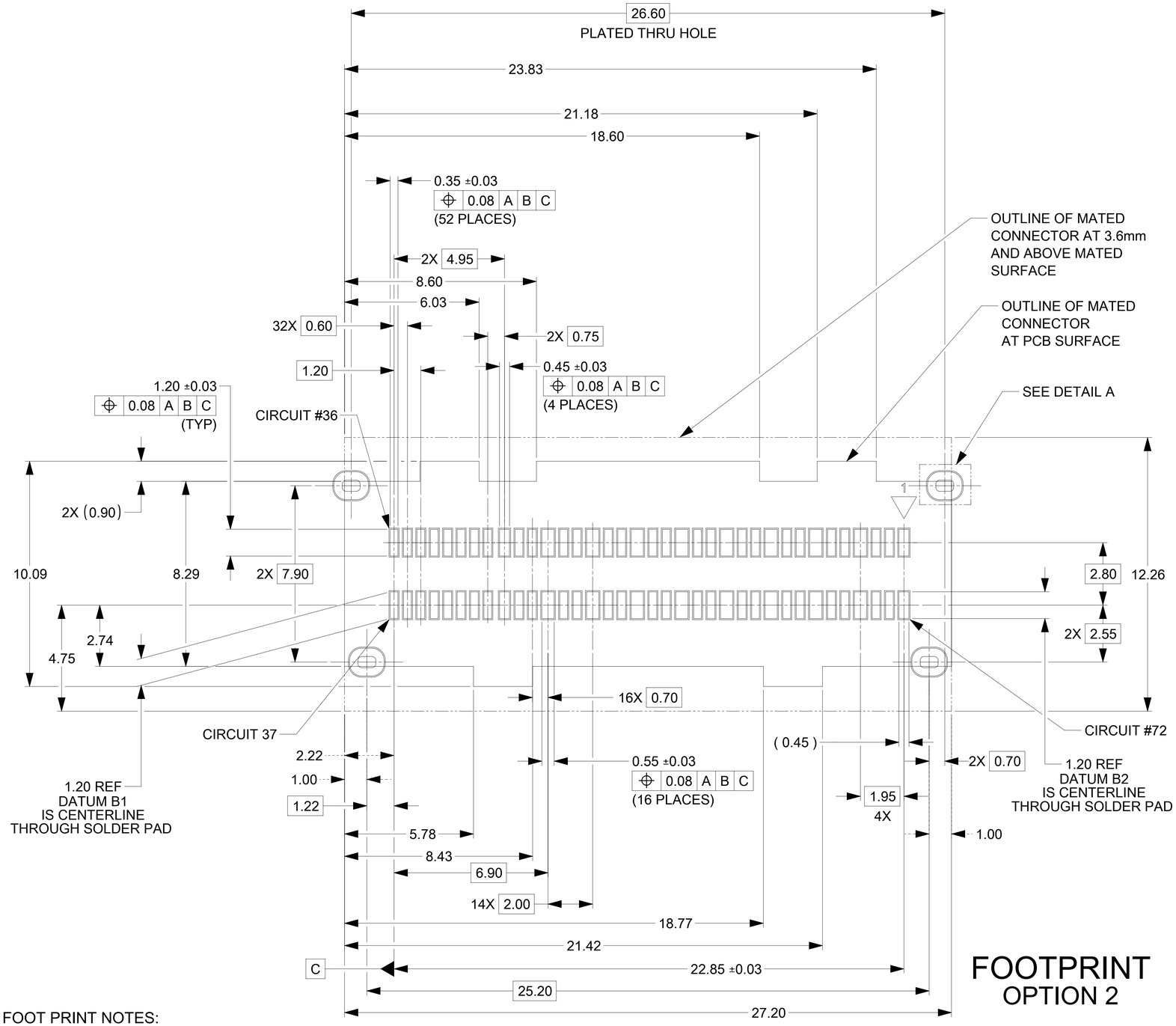

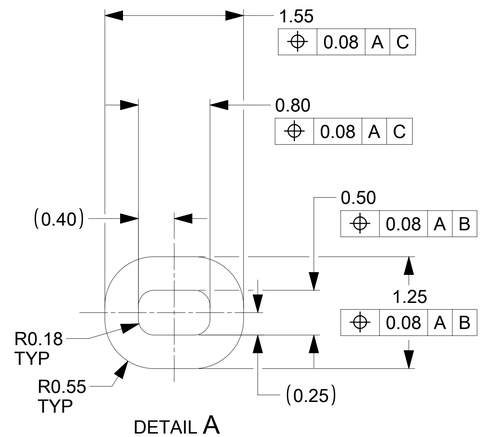

DETAIL A
SCALE 30:1
4 PLACES

FOOTPRINT
OPTION 2

FOOT PRINT NOTES:
1. DATUM -A- IS THE TOP OF THE PCB.
2. PIN-IN-PASTE SOLDERING METHOD IS RECOMMENDED, INCLUDING THRU-HOLE CAN TAILS. CONSULT NEARSTACK PCIe APPLICATION SPECIFICATION 2080210001-AS FOR FURTHER DETAILS ON SMT SOLDERING PROCESS RECOMMENDATIONS.

DOCUMENT STATUS	P1	RELEASE DATE	2023/05/05 17:38:08

FUNCTIONAL SYMBOLS: FA = 0; FC = 0; FB = 0
DIVISIONAL SYMBOLS

THIS DRAWING CONTAINS INFORMATION THAT IS PROPRIETARY TO MOLEX ELECTRONIC TECHNOLOGIES, LLC AND SHOULD NOT BE USED WITHOUT WRITTEN PERMISSION

DIMENSION UNITS	SCALE
mm	1:1

GENERAL TOLERANCES (UNLESS SPECIFIED)

ANGULAR TOL	± 0.5 °
4 PLACES	±
3 PLACES	±
2 PLACES	± 0.2
1 PLACE	±
0 PLACES	±

DRAFT WHERE APPLICABLE MUST REMAIN WITHIN DIMENSIONS

CURRENT REV DESC: UPDATE PER PCN 513324

EC NO: 748572
DRWN: TIBARRA 2022/11/14
CHK'D: MICAB 2023/05/05
APPR: TLAWRENCE 2023/05/05

INITIAL REVISION:
DRWN: TPREMO 2019/05/08
APPR: DMCGOWAN 2020/02/13

molex

PLUG, NEARSTACK PCIE 18DP & 16SE

PRODUCT CUSTOMER DRAWING

DOCUMENT NUMBER	DOC TYPE	DOC PART	REVISION
2080211000	PSD	000	E4

THIRD ANGLE PROJECTION	DRAWING	SERIES	MATERIAL NUMBER	CUSTOMER	SHEET NUMBER
	D-SIZE	208021	SEE TABLE	GENERAL MARKET	4 OF 5

CIRCUIT NUMBERS FOR 18 DIFFERENTIAL PAIRS
AND 16 SINGLE ENDED

	CIRCUIT #		CIRCUIT #
GROUND 1	1	GROUND 2	72
SIGNAL (DIFF PAIR)	2	SIGNAL (DIFF PAIR)	71
SIGNAL (DIFF PAIR)	3	SIGNAL (DIFF PAIR)	70
GROUND 1	4	GROUND 2	69
SIGNAL (DIFF PAIR)	5	SIGNAL (DIFF PAIR)	68
SIGNAL (DIFF PAIR)	6	SIGNAL (DIFF PAIR)	67
GROUND 1	7	GROUND 2	66
SIGNAL (DIFF PAIR)	8	SIGNAL (DIFF PAIR)	65
SIGNAL (DIFF PAIR)	9	SIGNAL (DIFF PAIR)	64
GROUND 1	10	GROUND 2	63
SIGNAL (DIFF PAIR)	11	SIGNAL (DIFF PAIR)	62
SIGNAL (DIFF PAIR)	12	SIGNAL (DIFF PAIR)	61
GROUND 1	13	GROUND 2	60
SIGNAL (DIFF PAIR)	14	SIGNAL (DIFF PAIR)	59
SIGNAL (DIFF PAIR)	15	SIGNAL (DIFF PAIR)	58
GROUND 1	16	GROUND 2	57
SIGNAL (DIFF PAIR)	17	SIGNAL (DIFF PAIR)	56
SIGNAL (DIFF PAIR)	18	SIGNAL (DIFF PAIR)	55
GROUND 1	19	GROUND 2	54
SIGNAL (DIFF PAIR)	20	SIGNAL (DIFF PAIR)	53
SIGNAL (DIFF PAIR)	21	SIGNAL (DIFF PAIR)	52
GROUND 1	22	GROUND 2	51
SIGNAL (DIFF PAIR)	23	SIGNAL (DIFF PAIR)	50
SIGNAL (DIFF PAIR)	24	SIGNAL (DIFF PAIR)	49
GROUND 1	25	GROUND 2	48
SIGNAL (DIFF PAIR)	26	SIGNAL (DIFF PAIR)	47
SIGNAL (DIFF PAIR)	27	SIGNAL (DIFF PAIR)	46
GROUND 1	28	GROUND 2	45
SIGNAL (SINGLE ENDED)	29	SIGNAL (SINGLE ENDED)	44
SIGNAL (SINGLE ENDED)	30	SIGNAL (SINGLE ENDED)	43
SIGNAL (SINGLE ENDED)	31	SIGNAL (SINGLE ENDED)	42
SIGNAL (SINGLE ENDED)	32	SIGNAL (SINGLE ENDED)	41
SIGNAL (SINGLE ENDED)	33	SIGNAL (SINGLE ENDED)	40
SIGNAL (SINGLE ENDED)	34	SIGNAL (SINGLE ENDED)	39
SIGNAL (SINGLE ENDED)	35	SIGNAL (SINGLE ENDED)	38
SIGNAL (SINGLE ENDED)	36	SIGNAL (SINGLE ENDED)	37

GROUND 1 AND GROUND 2 TO BE TREATED AS ELECTRICALLY COMMON

THIS DRAWING CONTAINS INFORMATION THAT IS PROPRIETARY TO MOLEX ELECTRONIC TECHNOLOGIES, LLC AND SHOULD NOT BE USED WITHOUT WRITTEN PERMISSION

FUNCTIONAL SYMBOLS
FA = 0
FC = 0
FP = 0
DIVISIONAL SYMBOLS

DIMENSION UNITS: mm
SCALE: 1:1
GENERAL TOLERANCES (UNLESS SPECIFIED)
ANGULAR TOL ± 0.5 °
4 PLACES ±
3 PLACES ±
2 PLACES ± 0.2
1 PLACE ±
0 PLACES ±
DRAFT WHERE APPLICABLE MUST REMAIN WITHIN DIMENSIONS

CURRENT REV DESC: UPDATE PER PCN 513324
EC NO: 748572
DRWN: TIBARRA 2022/11/14
CHK'D: MICAB 2023/05/05
APPR: TLAWRENCE 2023/05/05
INITIAL REVISION:
DRWN: TPREMO 2019/05/08
APPR: DMCGOWAN 2020/02/13

molex

PLUG, NEARSTACK PCIE 18DP & 16SE

PRODUCT CUSTOMER DRAWING

DOCUMENT NUMBER	DOC TYPE	DOC PART	REVISION
2080211000	PSD	000	E4

THIRD ANGLE PROJECTION	DRAWING	SERIES	MATERIAL NUMBER	CUSTOMER	SHEET NUMBER
	D-SIZE	208021		GENERAL MARKET	5 OF 5

DOCUMENT STATUS	P1	RELEASE DATE	2023/05/05 17:38:08