IM07JR ✔ ACTIVE

Axicom | Axicom IM

TE Internal #: 4-1462037-8

General Purpose Signal Relay, DC, Polarized, Monostable, 2 Form C DPDT-CO, 2 A Contact Rating, 24 VDC Coil Voltage, 250 VAC Contact Voltage, Axicom IM

View on TE.com >

Relays & Contactors > Electromechanical Relays > Standard Signal Relay 2 Form C,2 CO Cont

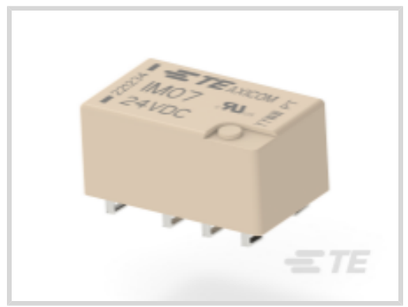







Relay & Contactor Type: **General Purpose Signal Relay**

Coil Magnetic System: **Polarized, Monostable**

Contact Arrangement: **2 Form C DPDT-CO**

Current Type: **DC**

Contact Current Rating: **2 A**

All Standard Signal Relay 2 Form C,2 CO Cont (72)

Features

Product Type Features

Relay & Contactor Type	General Purpose Signal Relay

Configuration Features

Contact Special Features	Bifurcated/Twin Contacts, J Leg
Relay Options	Power Switching, RF Rated
Contact Number of Poles	2
Contact Arrangement	2 Form C DPDT-CO

Electrical Characteristics

Contact Limiting Short-Time Current	2 A
Contact Limiting Making Current	2 A
Contact Limiting Continuous Current	2 A
Contact Limiting Breaking Current	2 A
Insulation Initial Dielectric Between Open Contacts	750 Vrms

Insulation Initial Dielectric Between Adjacent Contacts	1000 Vrms
Contact Switching Voltage (Max)	250 VAC
Contact Switching Load (Min)	.1mA @ .0001V
Voltage Standing Wave Ration (HF Parameter)	1.06db @ 100MHz, 1.49db @ 900MHz
Coil Resistance	2880 Ω
Insulation Initial Resistance	1000000 MΩ
Contact Current Rating	2 A
Coil Voltage Rating	24 VDC
Contact Voltage Rating	220 VDC
Coil Power Rating DC	.2 W
Insulation Initial Dielectric Between Contacts & Coil	1800 Vrms

Signal Characteristics

Isolation (HF Parameter)	-18.8dB @ 900MHz, -37dB @ 100MHz
Insertion Loss (HF Parameter)	-.03dB @ 100MHz, -.33dB @ 900MHz

Body Features

Product Weight	.75 g[.026 oz]
Enclosure Type	Hermetically Sealed

Contact Features

Contact Plating Material	Gold
Contact Material	PdRu

Termination Features

Main Termination & Connection Type	PCB SMT
Coil Termination & Connection Type	PCB SMT

Mechanical Attachment

Product Mount Type	Board Mount

Dimensions

Product Width	6 mm[.236 in]
Product Length	10 mm[.393 in]
Product Height	5.65 mm[.222 in]

Usage Conditions

Operating Temperature Range	-40 – 85 °C[-40 – 185 °F]
Environmental Category of Protection	RTV

Environmental Ambient Temperature (Max)	85 °C[185 °F]

Operation/Application

Solder Process	Reflow Solder Capable
Coil Magnetic System	Polarized, Monostable
Current Type	DC

Packaging Features

Packaging Method	Reel

Other

Coil Power Rating Class	>.15 – ≤.2 W
Contact Current Class	≤2 A
Height Class (Mechanical)	≤7 mm[≤.276 in]
Length Class (Mechanical)	≤11 mm[≤.433 in]
Width Class (Mechanical)	≤7 mm[≤.276 in]

Product Compliance

For compliance documentation, visit the product page on TE.com>

EU RoHS Directive 2011/65/EU	Compliant
EU ELV Directive 2000/53/EC	Compliant
China RoHS 2 Directive MIIT Order No 32, 2016	No Restricted Materials Above Threshold
EU REACH Regulation (EC) No. 1907/2006	Current ECHA Candidate List: JUNE 2025 (250) Candidate List Declared Against: JUNE 2025 (250) Does not contain REACH SVHC
Halogen Content	Low Bromine/Chlorine - Br and Cl < 900 ppm per homogenous material. Also BFR /CFR/PVC Free
Solder Process Capability	Reflow solder capable to 260°C

Product Compliance Disclaimer

This information is provided based on reasonable inquiry of our suppliers and represents our current actual knowledge based on the information they provided. This information is subject to change. The part numbers that TE has identified as EU RoHS compliant have a maximum concentration of 0.1% by weight in homogenous materials for lead, hexavalent chromium, mercury, PBB, PBDE, DBP, BBP, DEHP, DIBP, and 0.01% for cadmium, or qualify for an exemption to these limits as defined in the Annexes of Directive 2011/65/EU (RoHS2). Finished electrical and electronic equipment products will be CE marked as required by Directive 2011/65/EU. Components may not be CE marked. Additionally, the part numbers that TE has identified as EU ELV compliant have a maximum concentration of 0.1% by weight in homogenous materials for lead, hexavalent chromium, and mercury, and 0.01% for cadmium, or qualify for an exemption to these limits as defined in the Annexes of Directive 2000/53/EC (ELV). Regarding the REACH Regulation, the information TE provides on SVHC in articles for this part number is based on the latest European Chemicals Agency (ECHA) ‘Guidance on

requirements for substances in articles' posted at this URL: https://echa.europa.eu/guidance-documents/guidance-on-reach

Compatible Parts

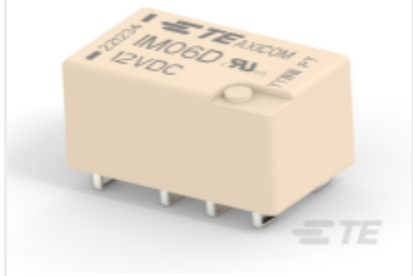

TE Part # 7-1462039-4
IM07DJR=IM RELAY 200mW 24V

Also in the Series | Axicom IM

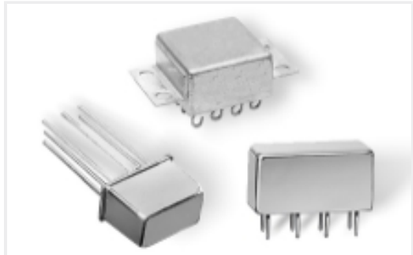

DC Relays(142)



Electromechanical Relays(142)

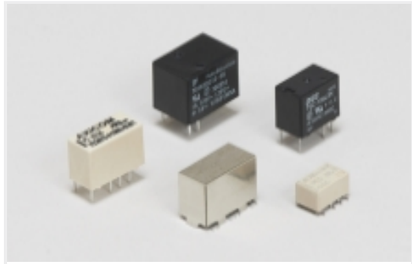

General Purpose Signal Relays(142)

Customers Also Bought



TE Part #224150-E
M8 FEMALE, A CODE, 3P, 16.25MM SMT

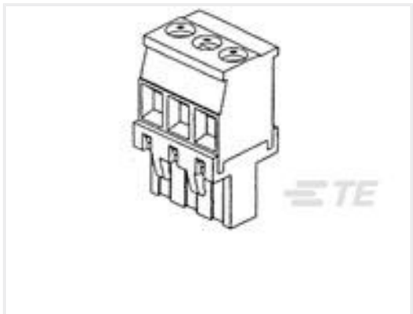

TE Part #284047-5
TERMI-BLOK VERTICAL PLUG STACK

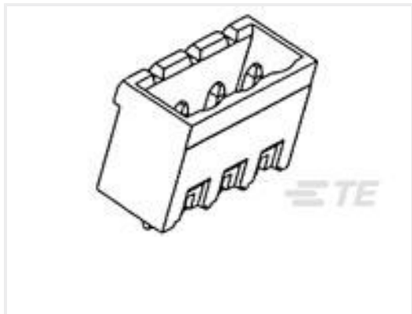

TE Part #796636-5
5POS 5.08MM CE VRT HDR,TRM BLK

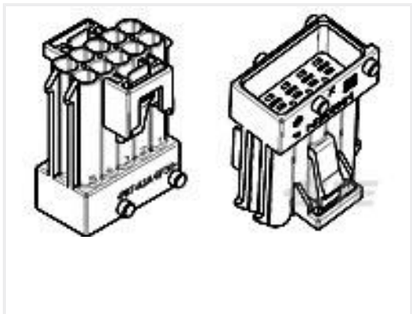

TE Part #1-962352-1
10P MESSERLEIS-GEH



TE Part #5-1415539-2
SR6V6K24



TE Part #1622565-1
LR1 1% 75K



TE Part #1-1623774-4
C14 100R 5% (LOOSE)



TE Part #1-2176055-1
RLP73M 2B R027 1% 1K RL

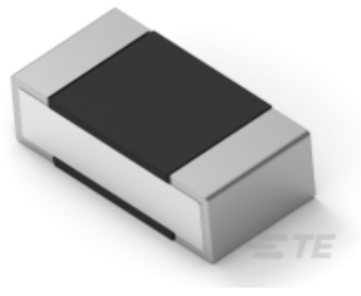

TE Part #9-2176312-0
RP 1E 0.1W 105K 0.1% 25PPM 1K RL



TE Part #5179031-5
0.8FH,P08H.5,120,08/Sn,TU

Documents

Product Drawings

IM07JR=IM RELAY 200mW 24V

English

CAD Files

Customer View Model

ENG_CVM_CVM_1462037-3_A.2d_dxf.zip

English

3D PDF

3D

Customer View Model

ENG_CVM_CVM_1462037-3_A.3d_igs.zip

English

Customer View Model

ENG_CVM_CVM_1462037-3_A.3d_stp.zip

English

Customer View Model

ENG_CVM_CVM_4-1462037-8_B5.3d_igs.zip

English

Customer View Model

ENG_CVM_CVM_4-1462037-8_B5.3d_stp.zip

English

Customer View Model

ENG_CVM_CVM_4-1462037-8_B5.2d_dxf.zip

English

3D PDF

3D

By downloading the CAD file I accept and agree to the Terms and Conditions of use.

Datasheets & Catalog Pages

Axicom Signal and High Frequency Relays (RF Switches) APPLICATION NOTE #2

English

IM_Datasheet

English

Product Specifications

Definitions General Purpose Relays

English

Agency Approvals

VDE Certificate

English