REL-IR4/LDP-110DC/4X21 - Single relay

2903680

https://www.phoenixcontact.com/us/products/2903680

Please be informed that the data shown in this PDF document is generated from our online catalog. Please find the complete data in the user documentation. Our general terms of use for downloads are valid.



Plug-in industrial relay with power contacts, 4 changeover contacts, test button, status LED, freewheeling diode, mechanical switching position indicator, polarity: A1+, A2-, coil voltage: 110 V DC

Commercial data

Item number	2903680
Packing unit	10 pc
Minimum order quantity	10 pc
Sales key	C460
Product key	DK6949
GTIN	4046356758932
Weight per piece (including packing)	34.058 g
Weight per piece (excluding packing)	34.058 g
Customs tariff number	85364900
Country of origin	PL

Technical data

Product properties

Product type	Single relay
Operating mode	100% operating factor
Mechanical service life	approx. 2x 10^7 cycles

Insulation characteristics

Insulation	Basic insulation
Overvoltage category	II
Pollution degree	2

Data management status

Date of last data management	25.08.2025

Electrical properties

Service life electrical	see diagram
Maximum power dissipation for nominal condition	0.88 W
Test voltage (Winding/contact)	2.5 kV_{rms} (50 Hz, 1 min., winding/contact)
Test voltage (Changeover contact/changeover contact)	2 kV_{rms} (50 Hz, 1 min., changeover contact/changeover contact)
Rated insulation voltage	250 V AC
Rated surge voltage	2.5 kV

Input data

Coil side

Nominal input voltage U_N	110 V DC
Input voltage range	88 V DC ... 198 V DC (20 °C)
Drive and function	monostable
Drive (polarity)	polarized
Typical input current at U_N	8 mA
Typical response time	13 ms
Typical release time	14 ms
Protective circuit	Freewheeling diode
Status display	LED (yellow)

Output data

Switching

Contact switching type	4 changeover contacts
Type of switch contact	Single contact
Contact material	AgNi
Maximum switching voltage	250 V AC/DC
Minimum switching voltage	5 V (At 24 mA)
Limiting continuous current	6 A

Maximum inrush current	16 A (20 ms, N/O contacts)
Min. switching current	5 mA (at 24 V)
Interrupting rating (ohmic load) max.	144 W (at 24 V DC)
	124 W (at 48 V DC)
	108 W (at 60 V DC)
	52 W (at 110 V DC)
	48 W (at 220 V DC)
	1500 VA (for 250 V AC)
Switching capacity min.	0.12 W
Switching capacity	2 A (at 24 V, DC13)
	0.22 A (at 120 V, DC13)
	0.11 A (at 250 V, DC13)
	1.5 A (at 24 V, AC15)
	1.5 A (at 120 V, AC15)
	1 A (at 240 V, AC15)
Motor load according to UL 508	1/3 HP, 240 V AC

Connection data

Connection method	Plug-in connection

Dimensions

Width	21.2 mm
Height	27.5 mm
Depth	35.6 mm

Environmental and real-life conditions

Ambient conditions

Degree of protection	RT I
Ambient temperature (operation)	-40 °C ... 70 °C
Ambient temperature (storage/transport)	-40 °C ... 85 °C

Approvals

Corrosive gas test

Identification	ISA-S71.04. G3 Harsh Group
	EN 60068-2-60

Standards and regulations

Standards/regulations	IEC 60664
	IEC 61810

Mounting

Mounting position	any

Drawings

Diagram

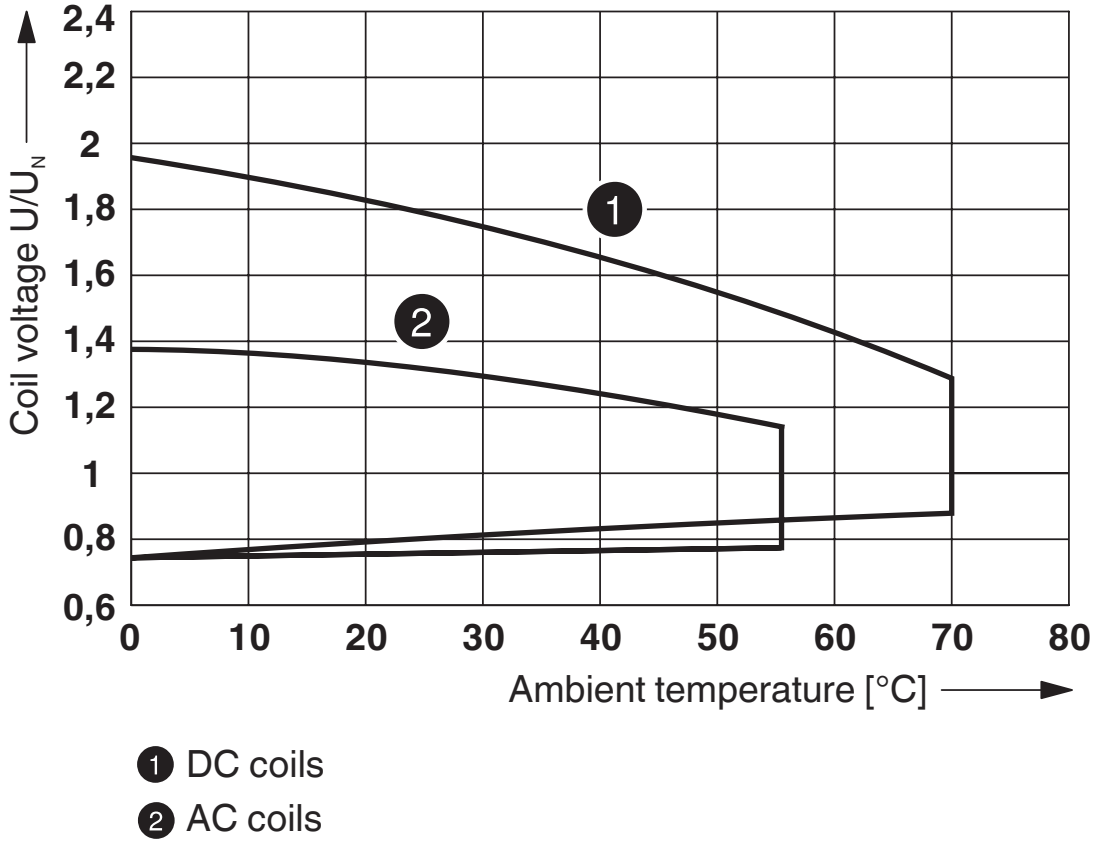

Operating voltage range

Diagram

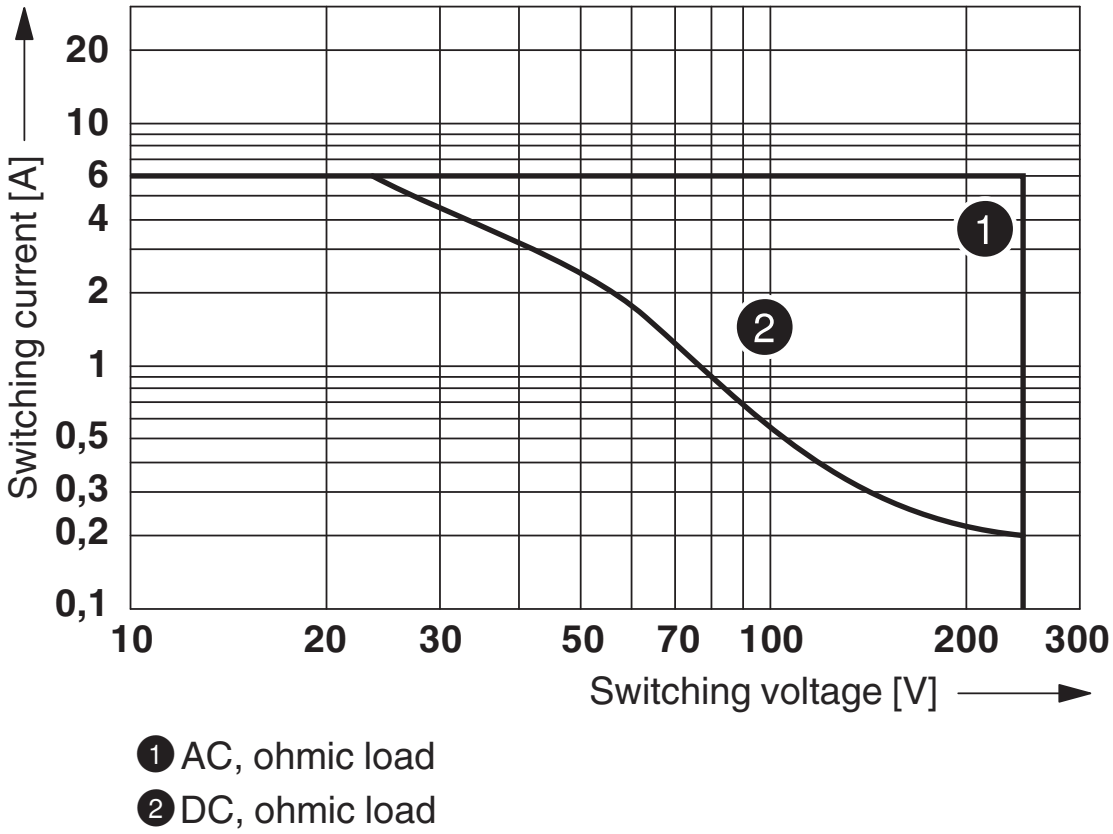

1 AC, ohmic load

2 DC, ohmic load

Interrupting rating

Diagram

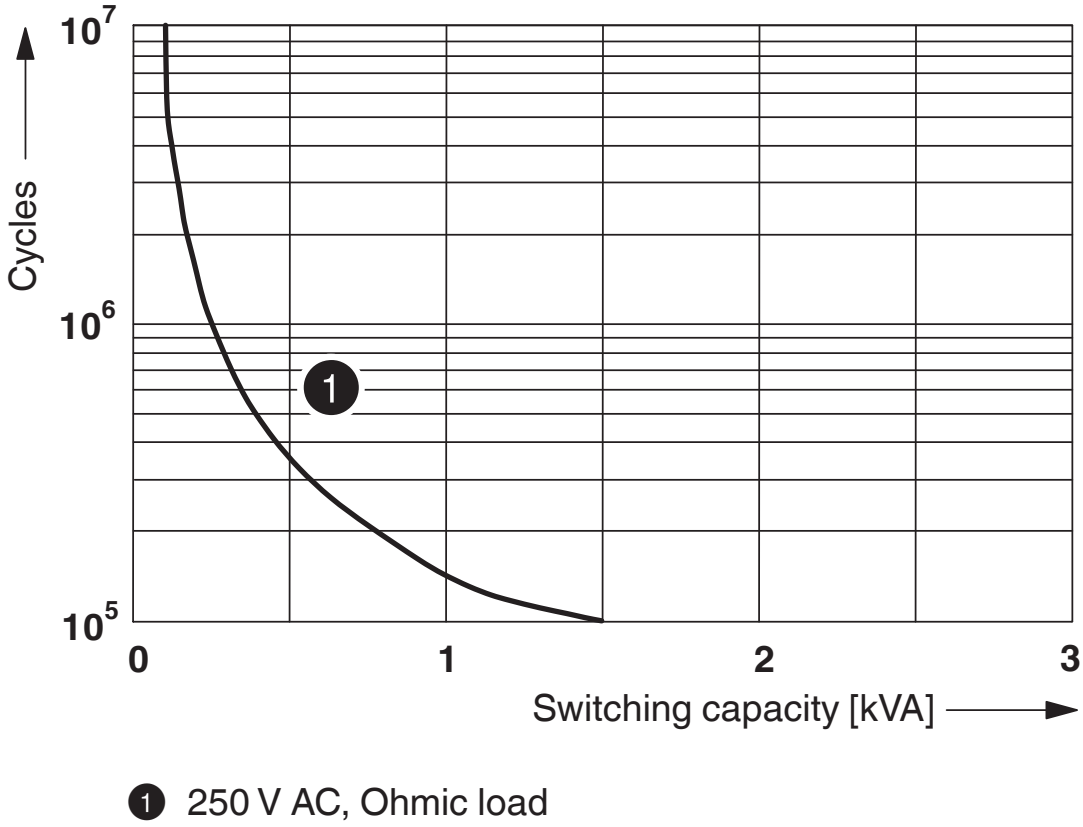

1 250 V AC, Ohmic load

Electrical service life

Diagram

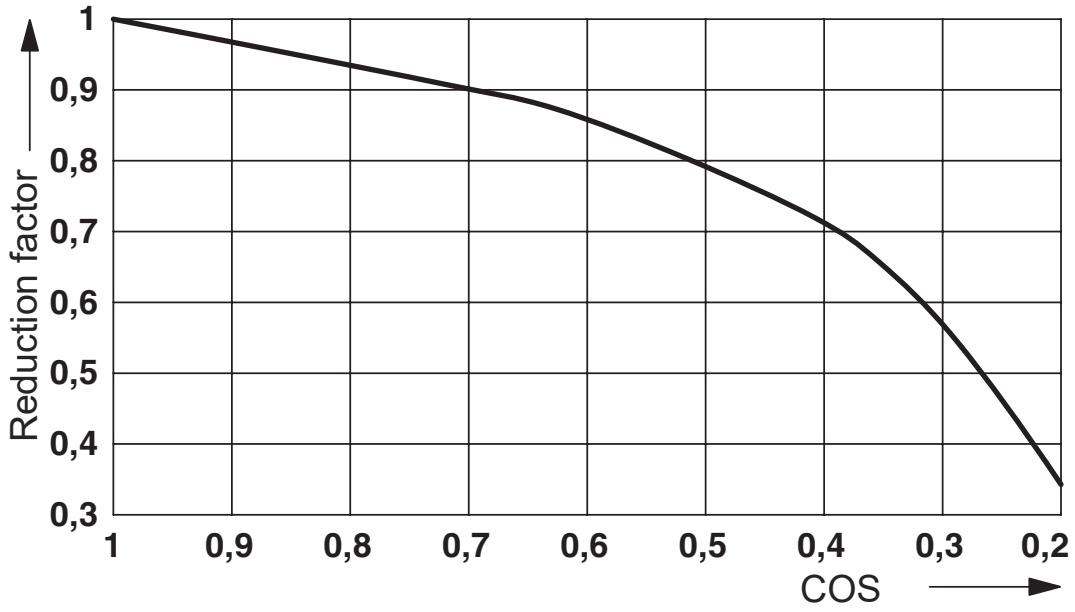

Service life reduction factor

Diagram

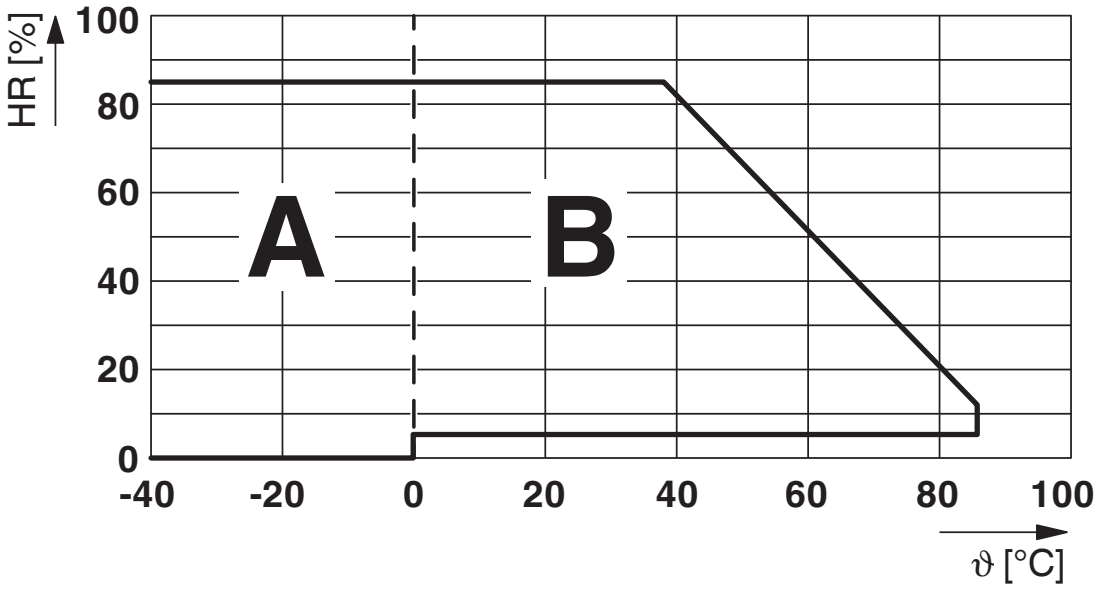

Permissible humidity for operation and storage.
The maximum permissible ambient temperature as specified in the data sheet must be observed.

Area A: Ice buildup at ambient temperatures ≤ 0°C must be prevented
Area B: Condensation at ambient temperatures > 0°C must be prevented

On 30 full days that are naturally distributed across an entire year, a humidity level of 95% is permissible at an ambient temperature ≤ 25°C.

Circuit diagram

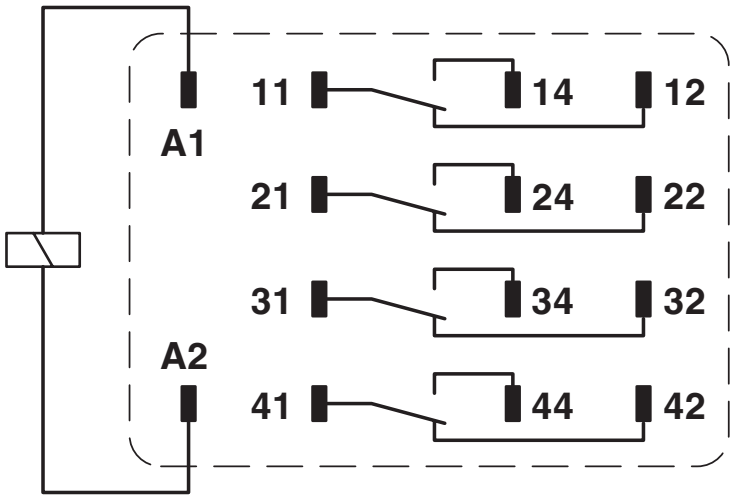

Approvals

To download certificates, visit the product detail page: https://www.phoenixcontact.com/us/products/2903680

CSA
Approval ID: 256725

EAC
Approval ID: RU*C-DE.*08.B.00010

VDE Zeichengenehmigung
Approval ID: 40040427

cULus Recognized
Approval ID: E172140

Classifications

ECLASS

ECLASS-13.0	27371601
ECLASS-15.0	27371601

ETIM

ETIM 9.0	EC001437

UNSPSC

UNSPSC 21.0	39122300

Environmental product compliance

EU RoHS

Fulfills EU RoHS substance requirements	Yes, No exemptions

China RoHS

Environment friendly use period (EFUP)	EFUP-E
	No hazardous substances above the limits

EU REACH SVHC

REACH candidate substance (CAS No.)	No substance above 0.1 wt%

Phoenix Contact 2025 © - all rights reserved
https://www.phoenixcontact.com

Phoenix Contact USA
586 Fulling Mill Road
Middletown, PA 17057, United States
(+717) 944-1300
info@phoenixcon.com