Data sheet

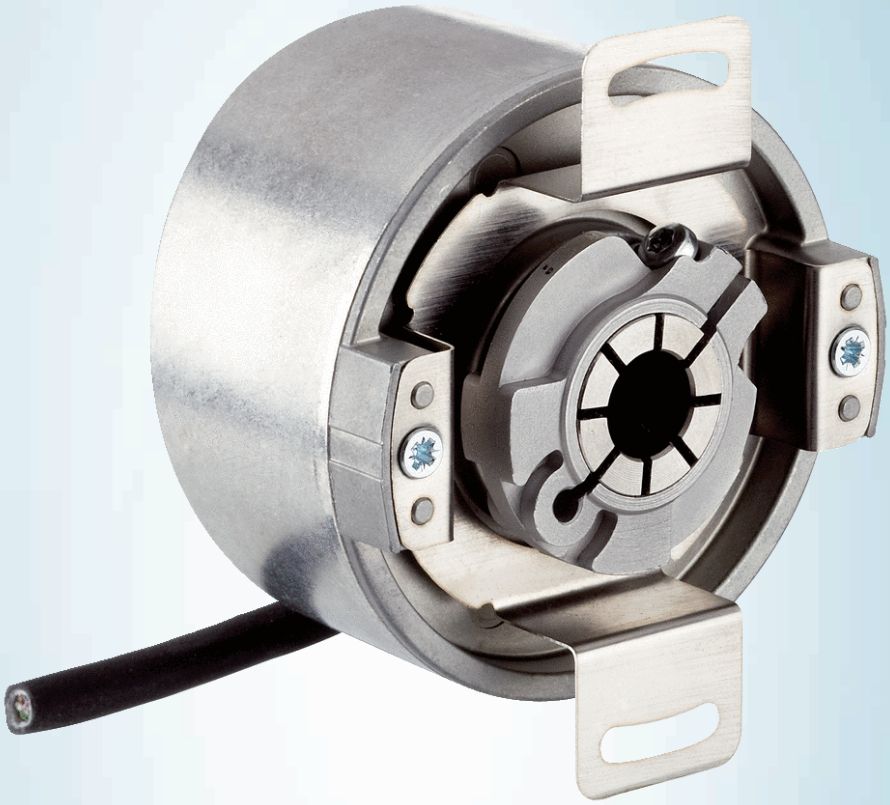

DFS60E-BEAL01024

DFS60

INCREMENTAL ENCODERS

SICK
Sensor Intelligence.



Illustration may differ

Ordering information

Type	part no.
DFS60E-BEAL01024	1036331

Other models and accessories ➜ www.sick.com/DFS60

Detailed technical data

Safety-related parameters

$MTTF_D$ (mean time to dangerous failure)	300 years (EN ISO 13849-1) [1]

[1] This product is a standard product and does not constitute a safety component as defined in the Machinery Directive. Calculation based on nominal load of components, average ambient temperature 40 °C, frequency of use 8760 h/a. All electronic failures are considered hazardous. For more information, see document no. 8015532.

Performance

Pulses per revolution	1,024 [1]
Measuring step	90°, electric/pulses per revolution
Measuring step deviation at binary number of lines	± 0.15°
Error limits	± 0.3°

[1] See maximum revolution range.

Interfaces

Communication interface	Incremental
Communication Interface detail	TTL / RS-422
Number of signal channels	6-channel
Initialization time	40 ms
Output frequency	≤ 300 kHz
Load current	≤ 30 mA
Operating current	40 mA (without load)

Electronics

Connection type	Cable, 8-wire, universal, 3 m [1]
Supply voltage	4.5 ... 5.5 V
Reference signal, number	1

[1] The universal cable connection is positioned so that it is possible to lay it without bends in a radial or axial direction.
[2] Short-circuit opposite to another channel, US or GND permissable for maximum 30 s.

Reference signal, position	90°, electric, logically gated with A and B
Short-circuit protection of the outputs	✓ [2]

[1] The universal cable connection is positioned so that it is possible to lay it without bends in a radial or axial direction.
[2] Short-circuit opposite to another channel, US or GND permissable for maximum 30 s.

Mechanics

Mechanical design	Blind hollow shaft
Shaft diameter	12 mm
Weight	+ 0.2 kg
Shaft material	Stainless steel
Flange material	Aluminum
Housing material	Aluminum die cast
Start up torque	0.8 Ncm (+20 °C)
Operating torque	0.6 Ncm (+20 °C)
Permissible movement static	± 0.3 mm (radial) ± 0.5 mm (axial)
Permissible movement dynamic	± 0.1 mm (radial) ± 0.2 mm (axial)
Operating speed	≤ 6,000 min^{-1} [1]
Moment of inertia of the rotor	40 gcm^2
Bearing lifetime	3.6 x 10^10 revolutions
Angular acceleration	≤ 500,000 rad/s^2

[1] Allow for self-heating of 3.3 K per 1,000 rpm when designing the operating temperature range.

Ambient data

EMC	According to EN 61000-6-2 and EN 61000-6-3
Enclosure rating	IP67, housing side, cable connection (IEC 60529) IP65, shaft side (IEC 60529)
Permissible relative humidity	90 % (Condensation not permitted)
Operating temperature range	0 °C ... +85 °C
Storage temperature range	–40 °C ... +100 °C, without package
Resistance to shocks	50 g, 6 ms (EN 60068-2-27)
Resistance to vibration	20 g, 10 Hz ... 2,000 Hz (EN 60068-2-6)

Certificates

EU declaration of conformity	✓
UK declaration of conformity	✓
ACMA declaration of conformity	✓
Moroccan declaration of conformity	✓
China-RoHS	✓
cULus certificate	✓
Information according to Art. 3 of Data Act (Regulation EU 2023/2854)	✓

Classifications

ECLASS 5.0	27270501

ECLASS 5.1.4	27270501
ECLASS 6.0	27270590
ECLASS 6.2	27270590
ECLASS 7.0	27270501
ECLASS 8.0	27270501
ECLASS 8.1	27270501
ECLASS 9.0	27270501
ECLASS 10.0	27270501
ECLASS 11.0	27270501
ECLASS 12.0	27270501
ETIM 5.0	EC001486
ETIM 6.0	EC001486
ETIM 7.0	EC001486
ETIM 8.0	EC001486
UNSPSC 16.0901	41112113

Dimensional drawing

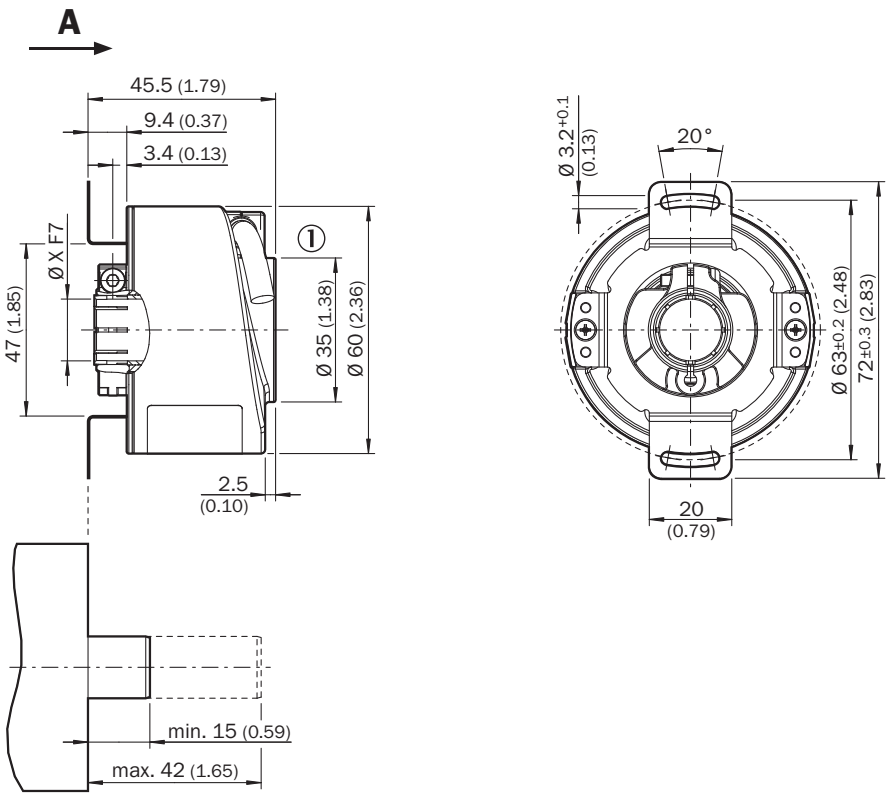

Dimensions in mm (inch)
① cable diameter = 5.6 mm +/- 0.2 mm bend radius = 30 mm

PIN assignment

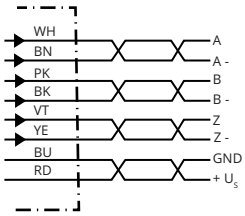

PINMale connector M12, 8-pin	PINMale connector M23, 12-pin	Wire colors (cable connection)	TTL/HTL signal	Sin/Cos 1.0 V_{PP}	Explanation
1	6	Brown	$\overline{A}$	COS-	Signal wire
2	5	White	A	COS+	Signal wire
3	1	Black	$\overline{B}$	SIN-	Signal wire
4	8	Pink	B	SIN+	Signal wire
5	4	Yellow	$\overline{Z}$	$\overline{Z}$	Signal wire
6	3	Purple	Z	Z	Signal wire
7	10	Blue	GND	GND	Ground connection
8	12	Red	$+U_S$	$+U_S$	Supply voltage
-	9	-	N.c.	N.c.	Not assigned
-	2	-	N.c.	N.c.	Not assigned
-	11	-	N.c.	N.c.	Not assigned
-	7 [1)]	Orange	0-SET [1)]	N.c.	Set zero pulse[1)]
Screen	Screen	Screen	Screen	Screen	Screen connected to housing on encoder side. Connected to ground on control side.

[1)] For electrical interfaces only: M, U, V, W with 0-SET function on PIN 7 on M23 plug. The 0-SET input is used to set the zero pulse to the current shaft position. If the 0-SET input is applied to US for longer than 250 ms after it has previously been open or applied to GND for at least 1,000 ms, the current shaft position is assigned zero pulse signal “Z”.

signal outputs

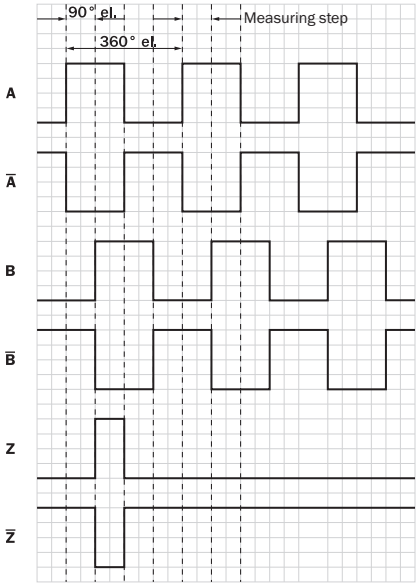

CW with view on the encoder shaft in direction “A”, compare dimensional drawing.

Supply voltage	Output
4,5 V ... 5,5 V	TTL
10 V ... 32 V	TTL
10 V ... 32 V	HTL

maximum revolution range

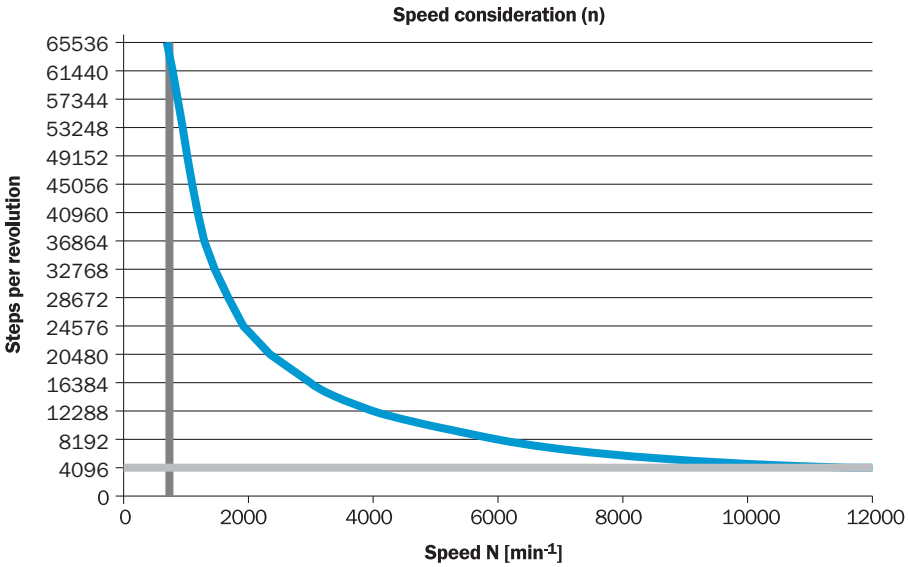

Recommended accessories

Other models and accessories ➜ www.sick.com/DFS60

	Brief description	Type	part no.
Mounting systems			
	• **Product family:** Stator couplings • **Description:** Standard stator coupling	BEF-DS00XFX	2056812
	• **Description:** Clamping ring for metal hollow shaft • **Material:** Steel • **Details:** Metal	BEF-KR-M	2064709
	• **Description:** Bearing bracket for hollow shaft encoders, fastening screws included the Bearing Block is intended for very large radial and axial shaft loads. Particularly for application on: Belt pulleys, Chain pinions, Friction wheels. It is designed this way to enable fitting of encoder with blind hollow shaft with ø 12 mm. Operating speed max. 6,000 rpm^-1, axial shaft load 100 N, radial shaft load 100 N, bearing service life 3.6 x 10^9 revolutions • **Items supplied:** Fastening screws included	BEF-FA-B12-010	2042728

	Brief description	Type	part no.
connectors and cables			
	• **Connection type head A:** Male connector, M12, 8-pin, straight, A-coded • **Signal type:** Incremental • **Cable:** CAT5, CAT5e • **Description:** Incremental, shielded • **Connection systems:** IDC quick connection • **Permitted cross-section:** 0.14 mm² ... 0.34 mm²	STE-1208-GA01	6044892
	• **Connection type head A:** Female connector, JST, 8-pin, straight • **Connection type head B:** Flying leads • **Signal type:** SSI, Incremental • **Items supplied:** JST including sealing • **Cable:** 3 m, 8-wire, PUR, halogen-free • **Description:** SSI, shielded, Incremental	DOL-0J08-G3M0AA6	2048591
	• **Connection type head A:** Female connector, JST, 8-pin, straight • **Connection type head B:** Flying leads • **Signal type:** SSI, Incremental • **Items supplied:** JST including sealing • **Cable:** 1.5 m, 8-wire, PUR, halogen-free • **Description:** SSI, shielded, Incremental	DOL-0J08-G1M5AA6	2048590
	• **Connection type head A:** Female connector, JST, 8-pin, straight • **Connection type head B:** Flying leads • **Signal type:** Incremental, SSI • **Items supplied:** JST including sealing • **Cable:** 0.5 m, 8-wire, PUR, halogen-free • **Description:** Incremental, shielded, SSI	DOL-0J08-G0M5AA3	2046873
	• **Connection type head A:** Female connector, JST, 8-pin, straight • **Connection type head B:** Flying leads • **Signal type:** Incremental, SSI • **Items supplied:** JST including sealing • **Cable:** 5 m, 8-wire, PUR, halogen-free • **Description:** Incremental, shielded, SSI	DOL-0J08-G05MAA3	2046876
	• **Connection type head A:** Female connector, JST, 8-pin, straight • **Connection type head B:** Flying leads • **Signal type:** Incremental, SSI • **Items supplied:** JST including sealing • **Cable:** 10 m, 8-wire, PUR, halogen-free • **Description:** Incremental, shielded, SSI	DOL-0J08-G10MAA3	2046877
	• **Connection type head A:** Male connector, M23, 12-pin, straight, A-coded • **Signal type:** HIPERFACE®, SSI, Incremental • **Description:** HIPERFACE®, shieldedSSIIncremental • **Connection systems:** Solder connection	STE-2312-GX	6028548
	• **Connection type head A:** Male connector, M23, 12-pin, straight, A-coded • **Signal type:** HIPERFACE®, SSI, Incremental • **Description:** HIPERFACE®, shieldedSSIIncremental • **Connection systems:** Solder connection	STE-2312-G01	2077273
	• **Connection type head A:** Female connector, JST, 8-pin, straight • **Connection type head B:** Male connector, M23, 12-pin, straight • **Signal type:** Incremental • **Cable:** 0.35 m, 8-wire, PUR, halogen-free • **Description:** Incremental, shielded	STL-2312-GM35AA3	2061621
	• **Connection type head A:** Female connector, JST, 8-pin, straight • **Connection type head B:** Male connector, M23, 12-pin, straight • **Signal type:** Incremental • **Cable:** 1 m, 8-wire, PUR, halogen-free • **Description:** Incremental, shielded	STL-2312-G01MAA3	2061622
	• **Connection type head A:** Female connector, JST, 8-pin, straight • **Connection type head B:** Male connector, M23, 12-pin, straight • **Signal type:** Incremental • **Cable:** 2 m, 8-wire, PUR, halogen-free • **Description:** Incremental, shielded	STL-2312-G02MAA3	2061504

SICK AT A GLANCE

SICK is one of the leading manufacturers of intelligent sensors and sensor solutions for industrial applications. A unique range of products and services creates the perfect basis for controlling processes securely and efficiently, protecting individuals from accidents and preventing damage to the environment.

We have extensive experience in a wide range of industries and understand their processes and requirements. With intelligent sensors, we can deliver exactly what our customers need. In application centers in Europe, Asia and North America, system solutions are tested and optimized in accordance with customer specifications. All this makes us a reliable supplier and development partner.

Comprehensive services complete our offering: SICK LifeTime Services provide support throughout the machine life cycle and ensure safety and productivity.

For us, that is “Sensor Intelligence.”

WORLDWIDE PRESENCE:

Contacts and other locations –www.sick.com