TCP 32DC/30A F - Thermal device circuit breaker

1499946

https://www.phoenixcontact.com/us/products/1499946

Please be informed that the data shown in this PDF document is generated from our online catalog. Please find the complete data in the user documentation. Our general terms of use for downloads are valid.



1-channel thermal device circuit breaker for protecting loads up to 32 V DC in the event of an overload. Fuse type: fast-acting. Can be plugged onto fuse terminal blocks and interfaces for flat plug-in fuse of type C according to standard ISO 8820-3. With fixed nominal current: 30 A

Your advantages

- Fast, replacement part-free recommissioning after an event with the reconnection options
- Easy to retrofit in existing systems with vehicle flat-type fuses with identical pin connector pattern
- Easy identification of the nominal current value via color marking

Commercial data

Item number	1499946
Packing unit	100 pc
Minimum order quantity	100 pc
Sales key	CL27
Product key	CLA112
GTIN	4063151955786
Weight per piece (including packing)	4.652 g
Weight per piece (excluding packing)	4.252 g
Customs tariff number	85362010
Country of origin	CN

Technical data

Product properties

Product type	Thermal device circuit breakers
Type	Male
Number of positions	1
No. of channels	1

Insulation characteristics

Protection class	III

Electrical properties

Fuse	thermal

General

Rated voltage	max. 32 V DC
Rated current I_N	30 A
Required backup fuse	Only required if I_{max} of the power supply > the short-circuit switching capacity.
Rated short-circuit switching capacity I_{cn}	300 A (≥3 shutdowns)
Short-circuit switching capacity	150 A (≥3 shutdowns)
	2000 A (≥ 1 switch-off)
Fuse	thermal
Voltage drop	< 150 mV
Contact switching type	Type C in accordance with ISO 8820-3

Connection data

Connection method	pluggable

Dimensions

Dimensional drawing	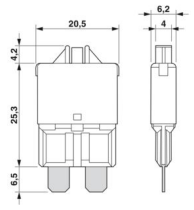
Width	6.2 mm
Height	19.7 mm
Depth	29.5 mm

Material specifications

Color	yellow green (RAL 6018)
Material	CuSn
Flammability rating according to UL 94	V-0

Insulating material	PA 6
Housing material	PA 6

Mechanical properties

Mechanical data

Open side panel	No

Environmental and real-life conditions

Ambient conditions

Degree of protection	IP30 (Actuation area)
Ambient temperature (operation)	-40 °C ... 85 °C
Ambient temperature (storage/transport)	-40 °C ... 125 °C

Mounting

Mounting type	on base element

Drawings

Dimensional drawing

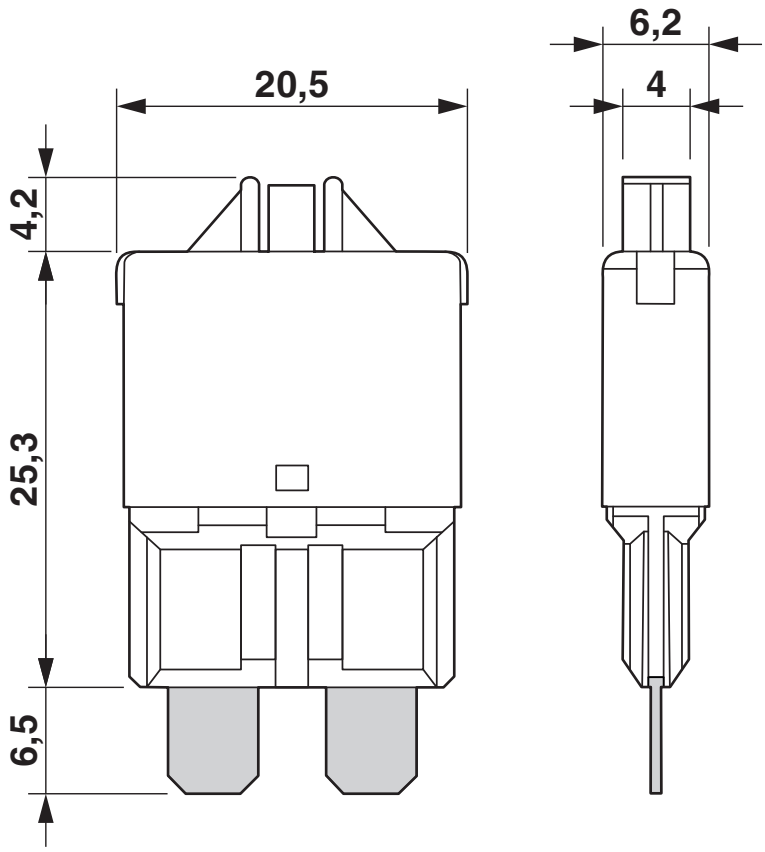

Diagram

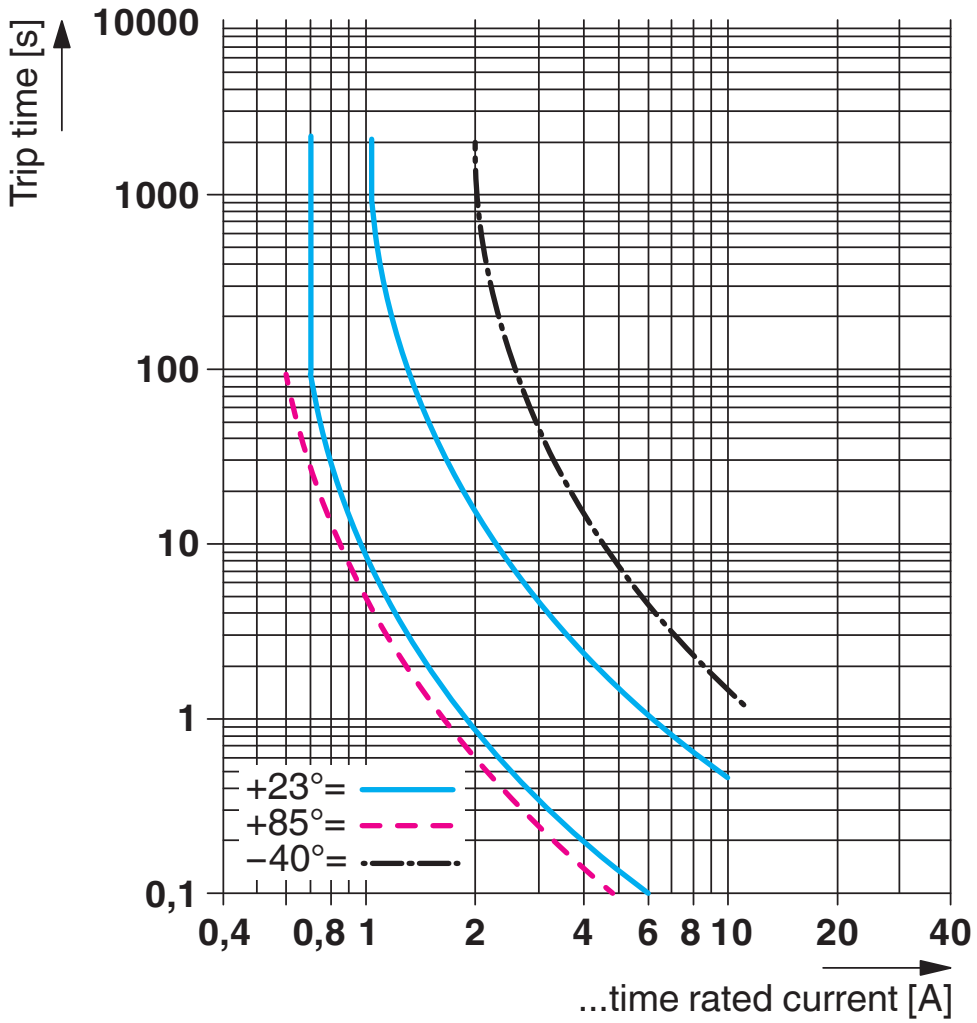

Trigger characteristic

Classifications

ECLASS

ECLASS-13.0	27140401
ECLASS-15.0	27140401

ETIM

ETIM 9.0	EC003538

Accessories

ST 4-FSI/C - Fuse modular terminal block

3036372

https://www.phoenixcontact.com/us/products/3036372



Fuse modular terminal block, fuse type: Blade, fuse type: C, nom. voltage: 400 V, nominal current: 30 A, connection method: Spring-cage connection, 1 level, Rated cross section: 4 mm^2, cross section: 0.08 mm^2- 6 mm^2, mounting type: NS 35/7,5, NS 35/15, color: black

ST 4-FSI/C-LED 12 - Fuse modular terminal block

3036495

https://www.phoenixcontact.com/us/products/3036495



Fuse terminal block with LED for mounting on NS 35, for miniature circuit breakers, terminal width: 8.2 mm, color: Black

ST 4-FSI/C-LED 24 - Fuse modular terminal block

3036505

https://www.phoenixcontact.com/us/products/3036505



Fuse terminal block with LED for mounting on NS 35, for miniature circuit breakers, terminal width: 8.2 mm, color: Black

UK 6-FSI/C - Fuse modular terminal block

3118203

https://www.phoenixcontact.com/us/products/3118203

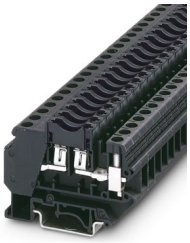

Fuse modular terminal block, fuse type: Blade, fuse type: C, nom. voltage: 250 V, nominal current: 30 A, number of positions: 1, connection method: Screw connection, 1 level, Rated cross section: 4 mm^2, cross section: 0.2 mm^2 - 10 mm^2, mounting type: NS 35/7,5, NS 35/15, NS 32, color: black

UK 6-FSI/C-LED12 - Fuse modular terminal block

3001925

https://www.phoenixcontact.com/us/products/3001925



Fuse modular terminal block, fuse type: Blade, fuse type: C, nom. voltage: 12 V, nominal current: 30 A, number of positions: 1, connection method: Screw connection, 1 level, Rated cross section: 4 mm^2, cross section: 0.2 mm^2 - 10 mm^2, mounting type: NS 35/7,5, NS 35/15, NS 32, color: black

UK 6-FSI/C-LED24 - Fuse modular terminal block

3001938

https://www.phoenixcontact.com/us/products/3001938



Fuse modular terminal block, fuse type: Blade, fuse type: C, nom. voltage: 24 V, nominal current: 30 A, number of positions: 1, connection method: Screw connection, 1 level, Rated cross section: 4 mm^2, cross section: 0.2 mm^2 - 10 mm^2, mounting type: NS 35/7,5, NS 35/15, NS 32, color: black

PT 6-FSI/C - Fuse modular terminal block

3212166

https://www.phoenixcontact.com/us/products/3212166



Fuse modular terminal block, fuse type: Blade, fuse type: Type C / max. 2.2 W, nom. voltage: 400 V, nominal current: 25 A, connection method: Push-in connection, Rated cross section: 6 mm^2, cross section: 0.5 mm^2 - 10 mm^2, mounting type: NS 35/7,5, NS 35/15, color: black

PT 6-FSI/C-LED 12 - Fuse modular terminal block

3212169

https://www.phoenixcontact.com/us/products/3212169



Fuse modular terminal block, fuse type: Blade, fuse type: Type C / max. 2.2 W, nom. voltage: 12 V, nominal current: 25 A, connection method: Push-in connection, Rated cross section: 6 mm^2, cross section: 0.5 mm^2 - 10 mm^2, mounting type: NS 35/7,5, NS 35/15, color: black

TCP 32DC/30A F - Thermal device circuit breaker

1499946

https://www.phoenixcontact.com/us/products/1499946

PT 6-FSI/C-LED 24 - Fuse modular terminal block

3212172

https://www.phoenixcontact.com/us/products/3212172



Fuse modular terminal block, fuse type: Blade, fuse type: Type C / max. 2.2 W, nom. voltage: 24 V, nominal current: 25 A, connection method: Push-in connection, Rated cross section: 6 mm^2, cross section: 0.5 mm^2 - 10 mm^2, mounting type: NS 35/7,5, NS 35/15, color: black

Phoenix Contact 2025 © - all rights reserved
https://www.phoenixcontact.com

Phoenix Contact USA
586 Fulling Mill Road
Middletown, PA 17057, United States
(+717) 944-1300
info@phoenixcon.com