CUDEVICES

MODEL: CMC-5044TF-A | **DESCRIPTION:** ELECTRET CONDENSER MICROPHONE

FEATURES

- omnidirectional
- analog
- solder pads



RoHS

ELECTRICAL

parameter	conditions/description	min	typ	max	units
directivity	omnidirectional				
sensitivity (S)	at 1 kHz (0 dB = 1 V/Pa)	-47	-44	-41	dB
supply voltage (V_{DD})			2.0	10	V
current consumption	V_{DD} = 2.0 V, RL = 2.2 kΩ			0.5	mA
sensitivity reduction	V_{DD} = 2.0 ~ 1.5 V			-3	dB
frequency (f)		100		20,000	Hz
signal to noise ratio (S/N)	at 1 kHz, Pin = 1 Pa (A-weighted)		60		dBA
total harmonic distortion (THD)	at 115 dB SPL, 1 kHz			10	%
acoustic overload point (AOP)	at 1 kHz			115	dB SPL
output impedance (Zout)	at 1 kHz			2.2	kΩ

Notes: 1. All specifications measured at 5~35°C, humidity at 45~85%, under 86~106 kPa pressure, unless otherwise noted.

ENVIRONMENTAL

parameter	conditions/description	min	typ	max	units
operating temperature		-20		70	°C
storage temperature		-20		70	°C
hand soldering	for 2±0.5 seconds	310	320	330	°C
RoHS	yes				

MECHANICAL

parameter	conditions/description	min	typ	max	units
dimensions	Ø6.0 x 5				mm
acoustic port	top				
material	AL				
terminals	solder pads				
weight			0.30		g

MECHANICAL DRAWING

units: mm
tolerance: ±0.2 mm

TERMINAL CONNECTIONS	
TERM.	FUNCTION
1	Output (+)
2	GND (-)

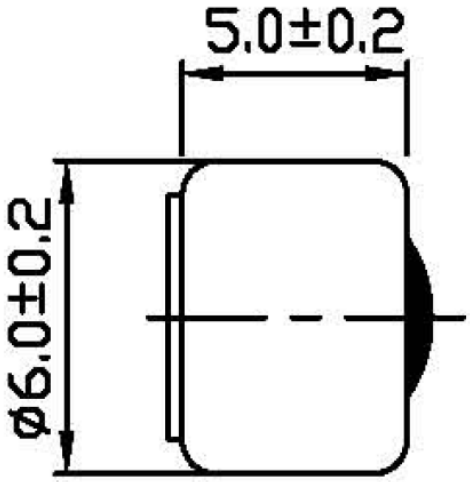

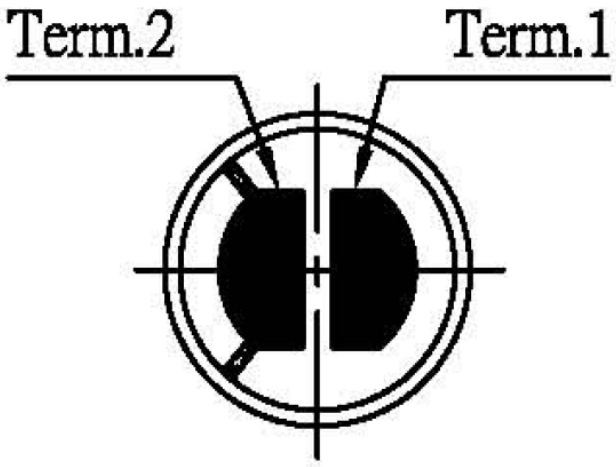

FREQUENCY RESPONSE CURVE

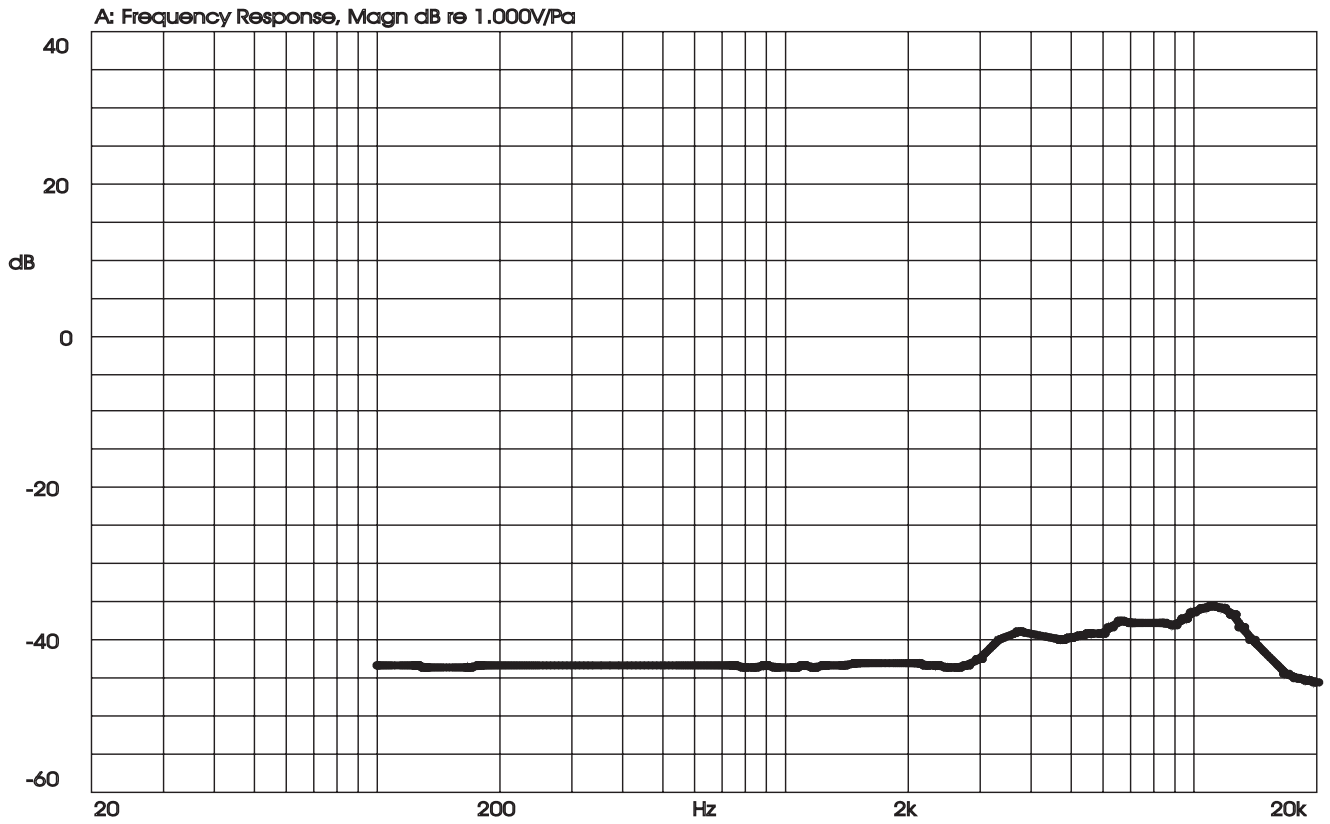

APPLICATION CIRCUIT

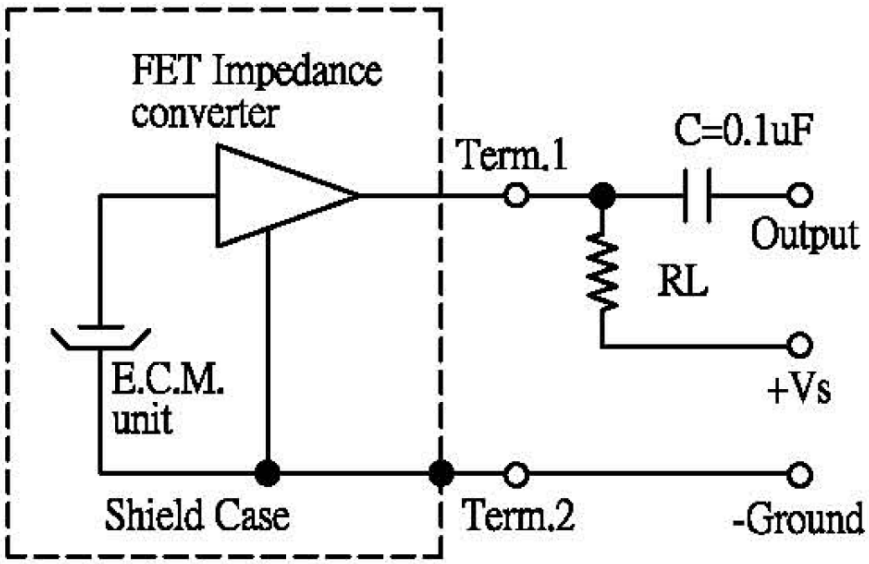

PACKAGING

Small Box Size: 63 x 63 x 8 mm
Medium Box Size: 125 x 65 x 45 mm
Carton Size: 230 x 230 x 270 mm
Small Box QTY: 100 pcs per box
Carton QTY: 40,000 pcs per carton

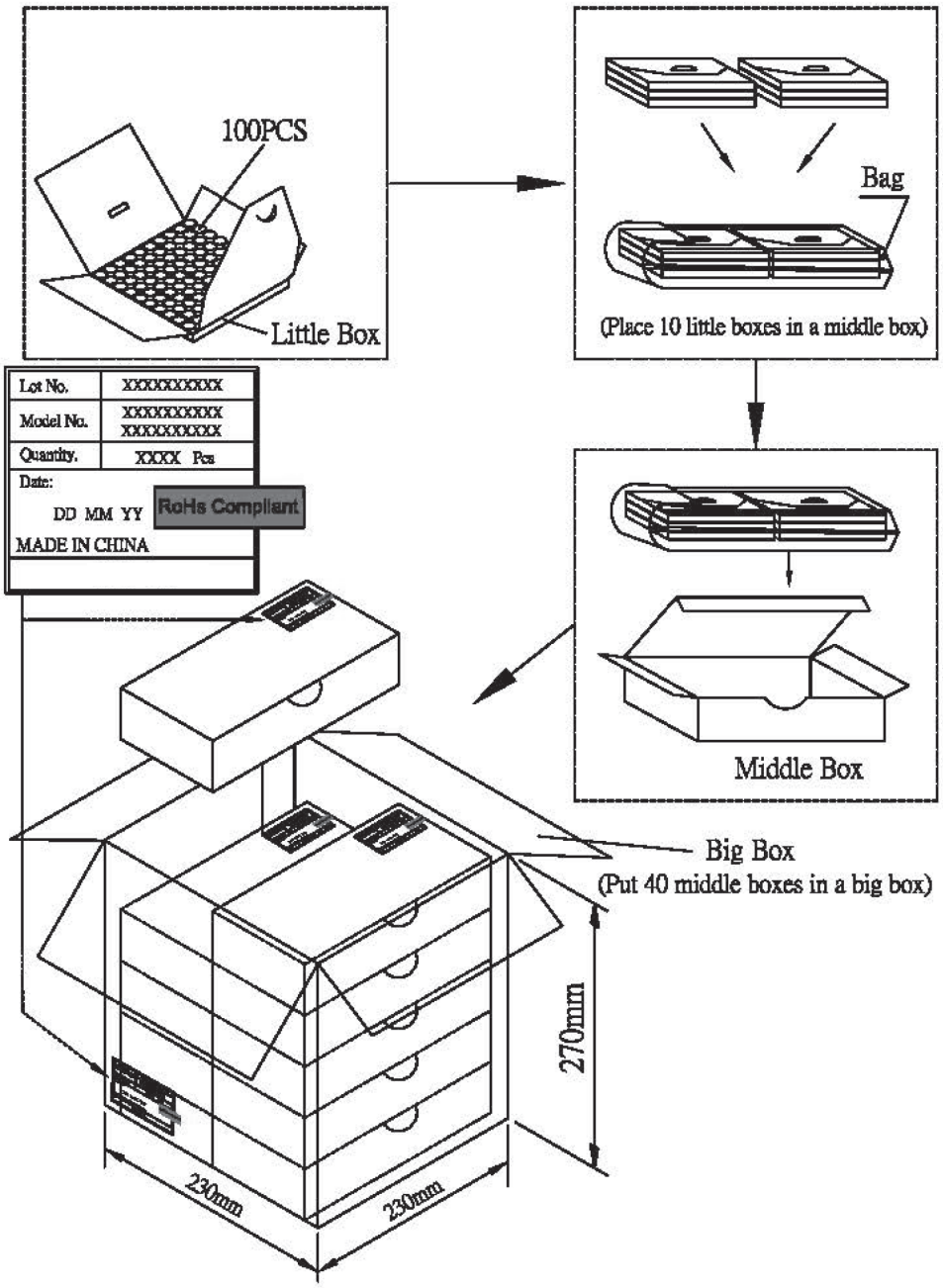

REVISION HISTORY

rev.	description	date
1.0	initial release	07/21/2008
1.01	changed color of mesh cloth	06/24/2019
1.02	brand update	01/17/2020
1.03	logo, datasheet style update	08/05/2022

The revision history provided is for informational purposes only and is believed to be accurate.

CUI Devices offers a one (1) year limited warranty. Complete warranty information is listed on our website.

CUI Devices reserves the right to make changes to the product at any time without notice. Information provided by CUI Devices is believed to be accurate and reliable. However, no responsibility is assumed by CUI Devices for its use, nor for any infringements of patents or other rights of third parties which may result from its use.

CUI Devices products are not authorized or warranted for use as critical components in equipment that requires an extremely high level of reliability. A critical component is any component of a life support device or system whose failure to perform can be reasonably expected to cause the failure of the life support device or system, or to affect its safety or effectiveness.

cuidevices.com