HC-STA-D07-HCLWS-PL-BK - Protective cover

1419275

https://www.phoenixcontact.com/us/products/1419275

Please be informed that the data shown in this PDF document is generated from our online catalog. Please find the complete data in the user documentation. Our general terms of use for downloads are valid.



Protective cover D7, with single locking latch, material: PA, protective cover material: PA, height: 28 mm, seal: no, Standard, with lanyard, for pin inserts

Commercial data

Item number	1419275
Packing unit	1 pc
Minimum order quantity	1 pc
Sales key	BF66
Product key	BF7AZC
Catalog page	Page 514 (C-2-2019)
GTIN	4055626160269
Weight per piece (including packing)	13.3 g
Weight per piece (excluding packing)	13 g
Customs tariff number	85389099
Country of origin	CN

Technical data

Product properties

Product type	Protective cover
Housing type	Protective cover
Application	Standard
Type	D7
Type	for sleeve housing without single locking latch
Retaining cord present	yes
Seal present	no

Dimensions

Dimensional drawing	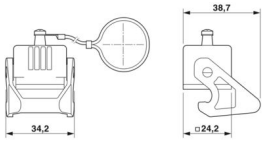
Width	24.2 mm
Height	28 mm
Length	24.2 mm
Diameter	25 mm

Material specifications

Color	black (RAL 9005)
Material Protective cover	PA
Flammability rating according to UL 94	V0 (Polyamide housing)
	V0 (Locking latch)
Housing material	PA
Material, protective cover	PA
Locking latch material	PA

Mechanical properties

Mechanical data

Locking type	Latch

Environmental and real-life conditions

Ambient conditions

Degree of protection	IP66
Ambient temperature (operation)	-20 °C ... 100 °C

Mounting

Assembly note	Plastic protective cover for short-term protection

Drawings

Dimensional drawing

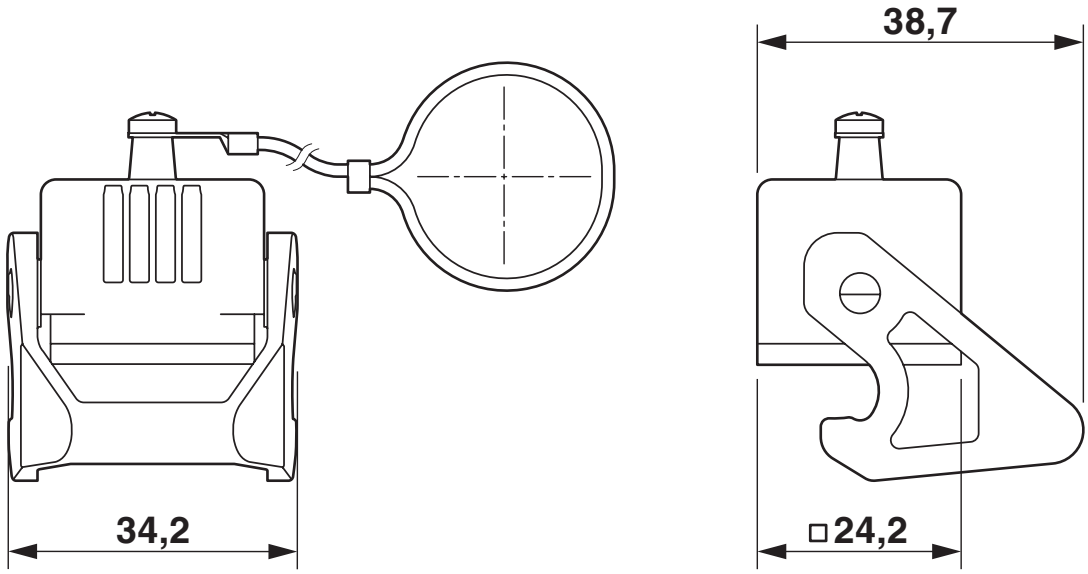

Dimensional drawing

Approvals

To download certificates, visit the product detail page: https://www.phoenixcontact.com/us/products/1419275

DNV
Approval ID: TAE000037S

Classifications

ECLASS

ECLASS-11.0	27440208
ECLASS-12.0	27440208
ECLASS-13.0	27440208

ETIM

ETIM 9.0	EC002314

UNSPSC

UNSPSC 21.0	39121400

Environmental product compliance

EU RoHS

Fulfills EU RoHS substance requirements	Yes, No exemptions

China RoHS

Environment friendly use period (EFUP)	EFUP-E
	No hazardous substances above the limits

EU REACH SVHC

REACH candidate substance (CAS No.)	No substance above 0.1 wt%

Accessories

HC-D07-SL-PLBK - Housing brackets

1424440

https://www.phoenixcontact.com/us/products/1424440

Replacement latch for HC-D7 housing



Phoenix Contact 2024 © - all rights reserved
https://www.phoenixcontact.com

Phoenix Contact USA
586 Fulling Mill Road
Middletown, PA 17057, United States
(+717) 944-1300
info@phoenixcon.com