MP2615D

2A, 1-Cell Li-Ion Battery Charger with Battery Voltage Exceeding 2.1V in QFN-16 (3mmx3mm) Package

DESCRIPTION

The MP2615D is a monolithic switching charger for 1-cell lithium-ion or lithium-polymer battery packs with built-in power MOSFETs. It can achieve up to 2A of charge current (I_{CC}), which can be configured via an accurate current-sense resistor across the entire input voltage (V_{IN}) range.

The MP2615D regulates the charge current and battery-full voltage (V_{BATT_FULL}) using two control loops to achieve highly accurate constant-current (CC) charge and constant-voltage (CV) charge.

With constant-off-time (COT) mode control, a 99% duty cycle can be achieved when the battery voltage (V_{BATT}) is close to V_{IN}. This process maintains the charge current at a relatively high level.

The battery temperature and charging status are always monitored for each condition. Two status monitor output pins are provided to indicate the battery charging status and input power status. The MP2615D also features internal reverse-blocking protection.

The MP2615D is available in a QFN-16 (3mmx3mm) package.

FEATURES

- 4.5V to 18V Operating Input Voltage (V_{IN}) Range
- Up to 99% Duty Cycle Operation
- Up to 2A Configurable Charging Current (I_{CC})
- ±0.75% Battery-Full Voltage (V_{BATT_FULL}) Accuracy
- 4.05V/4.13V V_{BATT_FULL}
- No Charge when Battery Voltage (V_{BATT}) < 2.1V
- Fully Integrated Power Switches
- Internal Loop Compensation
- No External Reverse-Blocking Diode Required
- Preconditioning for Fully Depleted Battery
- Charging Operation Indicator
- Configurable Safety Timer
- Thermal Shutdown Protection
- Cycle-by-Cycle Over-Current Protection (OCP)
- Battery Temperature Monitor and Protection
- Available in a QFN-16 (3mmx3mm) Package

APPLICATIONS

- Smartphones
- Portable Handheld Solutions
- Portable Media Players

All MPS parts are lead-free, halogen-free, and adhere to the RoHS directive. For MPS green status, please visit the MPS website under Quality Assurance. “MPS”, the MPS logo, and “Simple, Easy Solutions” are trademarks of Monolithic Power Systems, Inc. or its subsidiaries.

TYPICAL APPLICATION

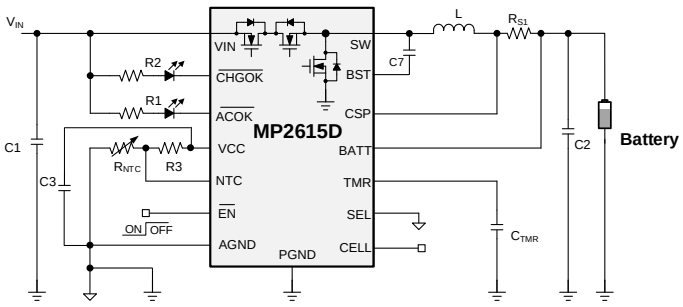

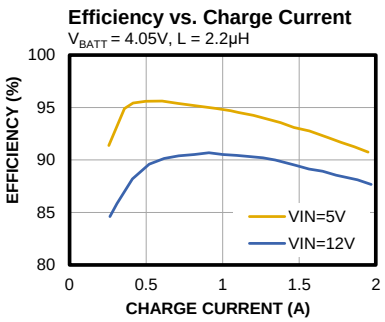

MPS Proprietary Information. Patent Protected. Unauthorized Photocopy and Duplication Prohibited.
© 2024 MPS. All Rights Reserved.

ORDERING INFORMATION

Part Number*	Package	Top Marking	MSL Rating
MP2615DGQ	QFN-16 (3mmx3mm)	*See Below*	1

* For Tape & Reel, add suffix -Z (e.g. MP2615DGQ-Z).

TOP MARKING

$\overline{\text{CCZY}}$
LLLL

CCZ: Product code of MP2615DGQ
Y: Year code
LLLL: Lot number

PACKAGE REFERENCE

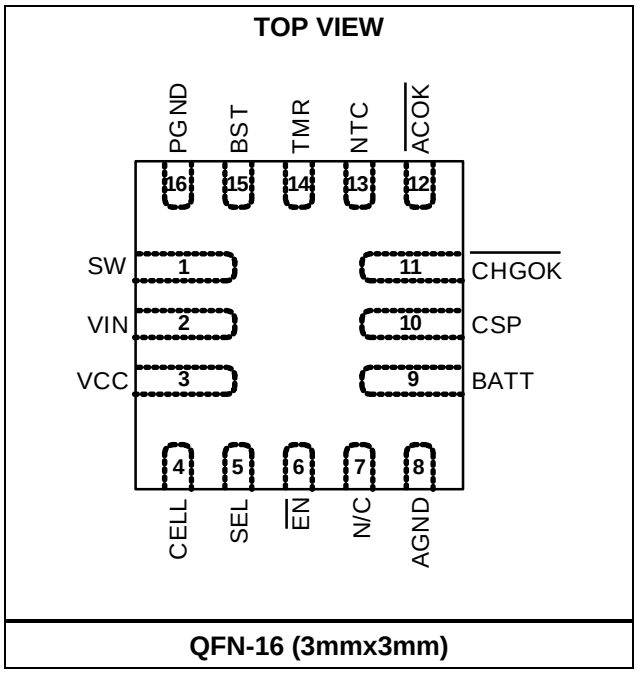

QFN-16 (3mmx3mm)

MPS Proprietary Information. Patent Protected. Unauthorized Photocopy and Duplication Prohibited.
© 2024 MPS. All Rights Reserved.

PIN FUNCTIONS

Pin #	Name	Description
1	SW	**Switch output**. (1)
2	VIN	**Power supply voltage.**
3	VCC	**Coarse regulator output.** The VCC pin has an internally generated 4.5V. Bypass VCC with a 1µF capacitor connected to AGND. The VCC pin provides power to the low-side switch driver as well as the pull-up bias voltage for the NTC resistor divider. Do not connect any external load at this pin.
4	CELL	**Float this pin or connect to GND.**
5	SEL	**Option for battery full voltage selection.** When SEL is low or floating, the battery-full voltage (V_{BATT_FULL}) is set to 4.05V (typically); when SEL is set high, V_{BATT_FULL} is set to 4.13V (typically).
6	$\overline{EN}$	**On/off control input.** This pin is pulled down to AGND with a 1MΩ internal resistor.
7	N/C	**No connection.** Float this pin.
8	AGND	**Analog ground.**
9	BATT	**Positive battery terminal.**
10	CSP	**Battery current-sense positive input.** Connect a resistor (R_{S1}) between the CSP and BATT pins.
11	$\overline{CHGOK}$	**Charging completion indicator.** A low logic on this pin indicates the charging operation. This pin becomes an open drain once charging is completed or suspended.
12	$\overline{ACOK}$	**Valid input supply indicator.** A low logic on this pin indicates the presence of a valid input power supply.
13	NTC	**Thermistor input.** Connect a resistor from the NTC pin to the VCC pin. In addition, connect a thermistor from this pin to ground.
14	TMR	**Internal safety timer control.** Connect a capacitor from this node to AGND to set the timer. The timer can be disabled by connecting this pin to AGND directly.
15	BST	**Bootstrap.** A capacitor is required to drive the power switch's gate above the supply voltage. Connect this capacitor between the SW and BST pins to form a floating supply across the power switch driver.
16	PGND	**Power ground.**

Note:

1) During start-up, the SW voltage (V_{SW}) can exceed the absolute voltage for a short period of time (<200ns).

MPS Proprietary Information. Patent Protected. Unauthorized Photocopy and Duplication Prohibited.
© 2024 MPS. All Rights Reserved.

ABSOLUTE MAXIMUM RATINGS (2)

V_{SW} .....-0.3V to +23V
V_{IN}, V_{ACOK}, V_{CHGOK}.....-0.3V to +23V
V_{BATT}, V_{CSP}.....-0.3V to +12V
V_{BST} ..... V_{SW} + 6V
All other pins .....-0.3V to +6V
Junction temperature (T_J) .....150°C
Lead temperature .....260°C
Continuous power dissipation (T_A = 25°C) (3)
……...2.5W
Operating temperature..... -40°C to +85°C

ESD Ratings

Human body model (HBM) ..... ±1kV
Charged-device model (CDM).....±750V

Recommended Operating Conditions (4)

V_{IN} .....4.5V to 18V
V_{BATT}.....2V to 4.03V
Operating junction temp (T_J).... -40°C to +125°C

Thermal Resistance (5) θ_{JA} θ_{JC}

QFN-16 (3mmx3mm).....50..... 12... °C/W

Notes:

2) Exceeding these ratings may damage the device.
3) The maximum allowable power dissipation is a function of the maximum junction temperature, T_J (MAX), the junction-to-ambient thermal resistance, θ_{JA}, and the ambient temperature, T_A. The maximum allowable continuous power dissipation at any ambient temperature is calculated by P_D (MAX) = (T_J (MAX) - T_A) / θ_{JA}. Exceeding the maximum allowable power dissipation can cause excessive die temperature, and the regulator may go into thermal shutdown. Internal thermal shutdown circuitry protects the device from permanent damage.
4) The device is not guaranteed to function outside of its operating conditions.
5) Measured on a JESD51-7, 4-layer PCB.

MPS Proprietary Information. Patent Protected. Unauthorized Photocopy and Duplication Prohibited.
© 2024 MPS. All Rights Reserved.

ELECTRICAL CHARACTERISTICS

V_{IN} = 12V, V_{CELL} = 0V, V_{SEL} = 0V, C1 = 22µF, C2 = 22µF, T_A = 25°C, unless otherwise noted.

Parameter	Symbol	Condition	Min	Typ	Max	Units
Input Voltage and Current						
Input voltage	V_{IN}	Cell floating	4.5	12	18	V
Under-voltage lockout (UVLO) rising threshold	V_{UVLO}		3.55	3.76	3.97	V
UVLO hysteresis				250	470	mV
Supply current (shutdown)	I_{SHDN}	$\overline{EN}$ = 4V		0.27		mA
Supply current (quiescent)	I_Q	$\overline{EN}$ = 0V		1.1		mA
Power MOSFET						
High-side MOSFET (HS-FET) on resistance	$R_{H_DS(ON)}$	Measured from VIN to SW		110		mΩ
Low-side MOSFET (LS-FET) on resistance	$R_{L_DS(ON)}$			110		mΩ
Switch leakage		$\overline{EN}$ = 4V, V_{SW} = 0V		0	1	µA
Frequency and Time Parameter						
Switching frequency	f_{SW}	V_{BATT} = 3.8V	842	1000	1158	kHz
Minimum off time (6)	t_{OFF}	V_{BATT} = 4.5V		200		ns
Charging Parameters						
Terminal battery voltage	V_{BATT_FULL}	V_{SEL} = 0V	4.03	4.05	4.07	V
		V_{SEL} = 4V	4.11	4.13	4.15	
Battery over-voltage (OV) threshold	V_{BOVP}	V_{SEL} = 0V	4.1	4.21	4.3	
		V_{SEL} = 4V	4.2	4.3	4.4	
Recharge threshold at battery voltage (V_{BATT})	V_{RECH}	V_{SEL} = 0V		3.92		
		V_{SEL} = 4V		4		
Recharge hysteresis				40		mV
Battery under-voltage protection (UVP) falling threshold	V_{BATT_UV}	V_{SEL} = 0V		2.03		V
		V_{SEL} = 4V		2.07		
Battery UV hysteresis				110		mV
Trickle charge voltage threshold	V_{TC}	V_{SEL} = 0V		3		V
Trickle charge hysteresis				220		mV
Peak current limit		CC (6)	2.9	3.8		A
		Trickle		2.2		
Constant-current (CC) charge current	I_{CC}	R_{S1} = 47mΩ	0.9	1	1.1	A

MPS Proprietary Information. Patent Protected. Unauthorized Photocopy and Duplication Prohibited.
© 2024 MPS. All Rights Reserved.

ELECTRICAL CHARACTERISTICS *(continued)*

V_{IN} = 12V, V_{CELL} = 0V, V_{SEL} = 0V, C1 = 22µF, C2 = 22µF, T_A = 25°C, unless otherwise noted.

Parameter	Symbol	Condition	Min	Typ	Max	Units
Trickle charge current	I_{TC}		4%	10%	16%	I_{CC}
Termination current threshold	I_{BF}		4%	10%	16%	I_{CC}
V_{IN} minimum headroom (reverse blocking)		V_{IN} - V_{BATT}		300		mV
Maximum current-sense voltage (CSP to BATT)	V_{SENSE}		42.3	47.0	51.7	mV
CSP, BATT current	I_{CSP}, I_{BATT}	Charging disabled			0.5	µA
$\overline{ACOK}$ / $\overline{CHGOK}$ open-drain sink current		V_{DRAIN} = 0.3V	5			mA
VCC Regulator Output						
VCC output voltage	V_{CC}		4.17	4.5	4.82	V
VCC load regulation	ΔV_{CC}	I_{LOAD} = 0 to 10mA			10	mV
EN Control						
$\overline{EN}$ input low voltage					0.4	V
$\overline{EN}$ input high voltage			1.9			V
$\overline{EN}$ input current	I_{EN}	$\overline{EN}$ = 4V		4		µA
		$\overline{EN}$ = 0V		0.2		
Timer Protection						
Trickle charge time	$t_{TRICKLE_TMR}$	C_{TMR} = 0.47µF		30		min
CC/CV charge time	t_{TOTAL_TMR}	C_{TMR} = 0.47µF		165		
NTC Protection						
NTC low temp rising threshold		R_{NTC} = NCP18X103, 0°C (7), T_A = -20°C to +85°C (6)	70.5%	73.3%	74.6%	V_{CC}
NTC low temp rising threshold hysteresis				2%		
NTC high temp falling threshold		R_{NTC} = NCP18X103,50°C (7), T_A = -20°C to +85°C (6)	28%	29.3%	30.6%	
NTC low temp falling threshold hysteresis				2%		
Thermal Protection						
Thermal shutdown (6)	T_{SHDN}			150		°C
Thermal shutdown hysteresis (6)				20		°C
Reverse Leakage Blocking						
Battery reverse leakage current	$I_{LEAKAGE}$				0.5	µA

Notes:

6) Guaranteed by design.
7) This is the operation temperature limit when using the specified NTC resistor.

MPS Proprietary Information. Patent Protected. Unauthorized Photocopy and Duplication Prohibited.
© 2024 MPS. All Rights Reserved.

TYPICAL PERFORMANCE CHARACTERISTICS

V_{IN} = 12V, C1 = C2 = 22µF, SEL = GND, CELL = floating, L = 2.2µH, R_{S1} = 47mΩ, battery simulator, T_A = 25°C, unless otherwise noted.

Battery-Full Voltage vs. Temperature

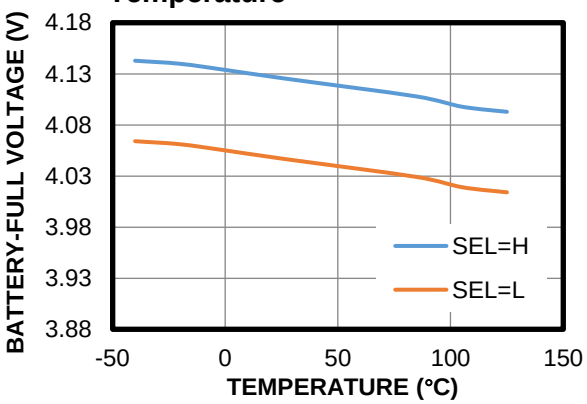

CC Charge Current vs.Temperature

R_{SENSE} = 47mΩ

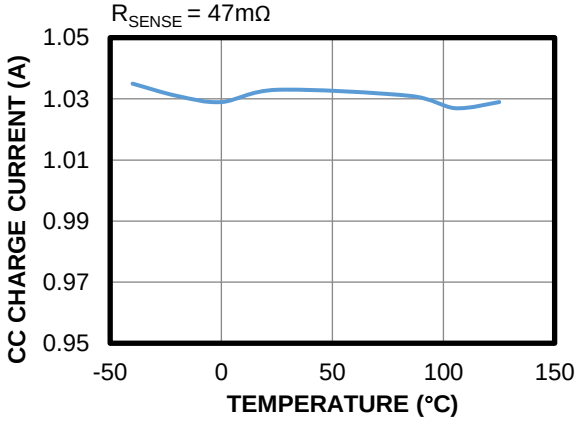

Trickle Charge Current vs. Temperature

R_{SENSE} = 47mΩ

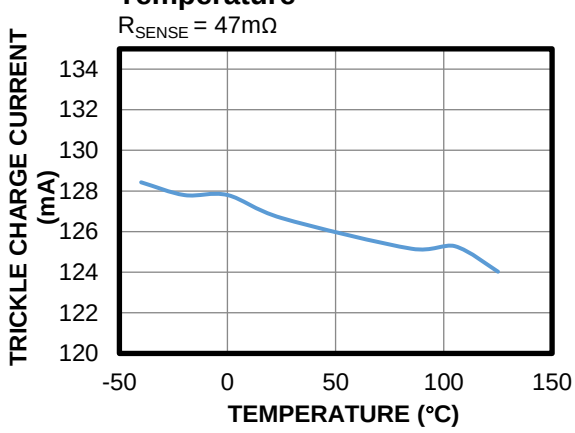

Charge Full Current vs. Temperature

R_{SENSE} = 47mΩ

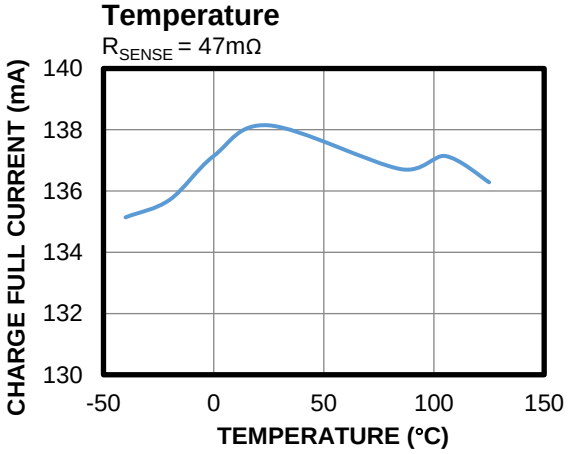

Baterry UVLO Falling Threshold vs. Temperature

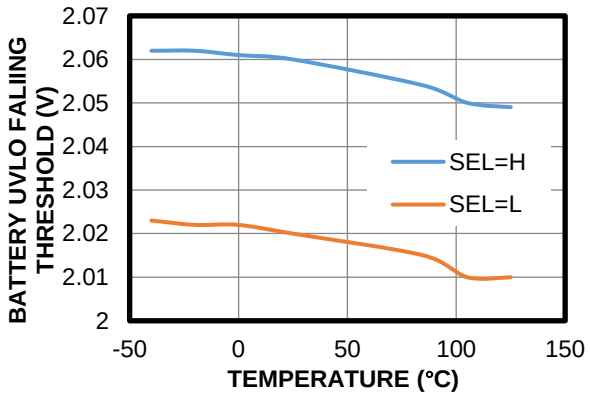

Auto-Recharge Threshold vs. Temperature

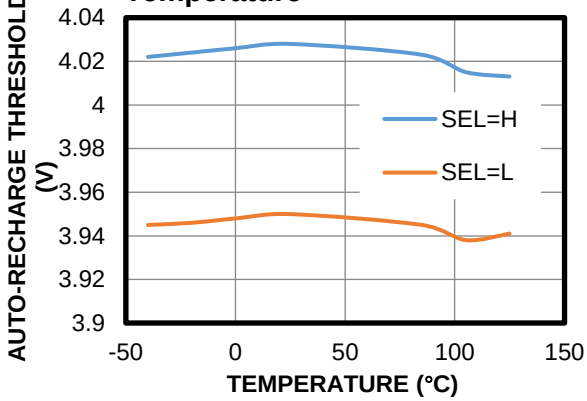

MPS Proprietary Information. Patent Protected. Unauthorized Photocopy and Duplication Prohibited.
© 2024 MPS. All Rights Reserved.

TYPICAL PERFORMANCE CHARACTERISTICS

V_{IN} = 12V, C1 = C2 = 22µF, SEL = GND, CELL = floating, L = 2.2µH, R_{S1} = 47mΩ, battery simulator, T_A = 25°C, unless otherwise noted.

Battery Charge Curve

V_{BATT} = 0V to 4.05V

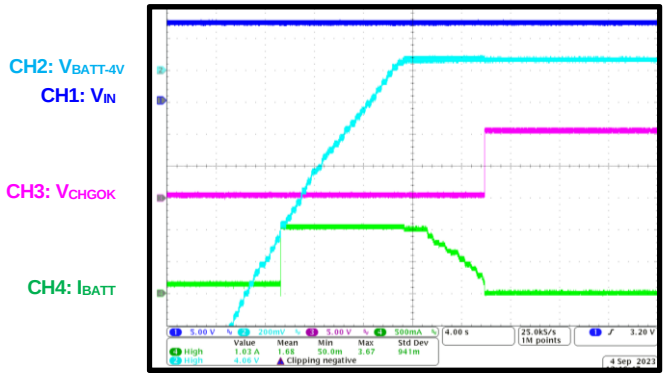

Auto-Recharge

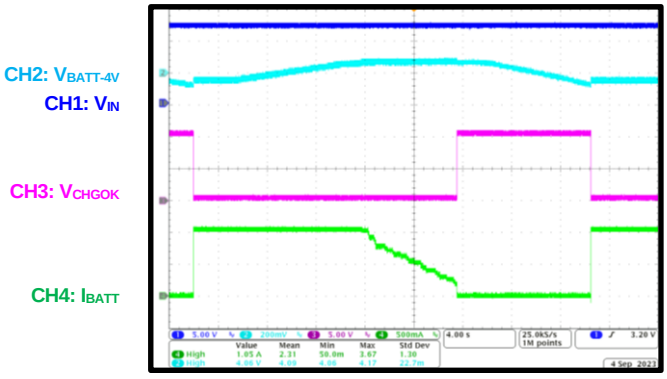

Trickle Charge to No Charge

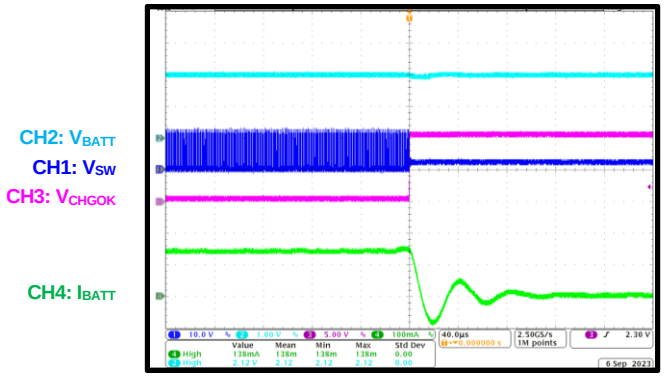

Trickle Charge

V_{BATT} = 2.5V

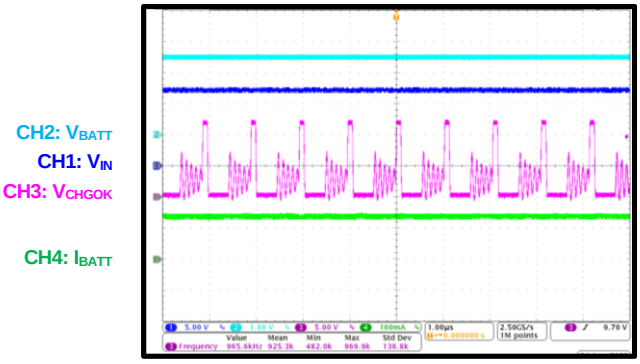

Constant-Current Charge

V_{BATT} = 3.7V

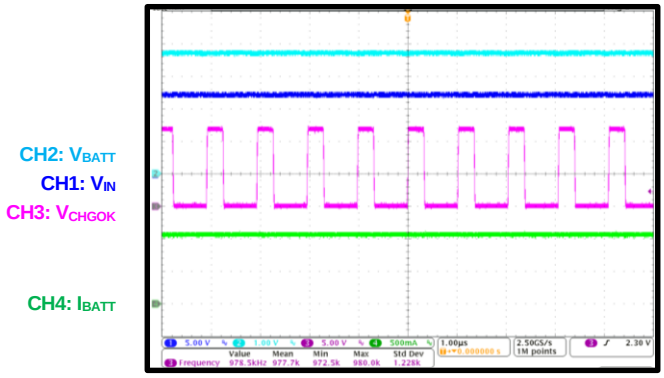

Constant-Voltage Charge

V_{BATT} = 4.05V

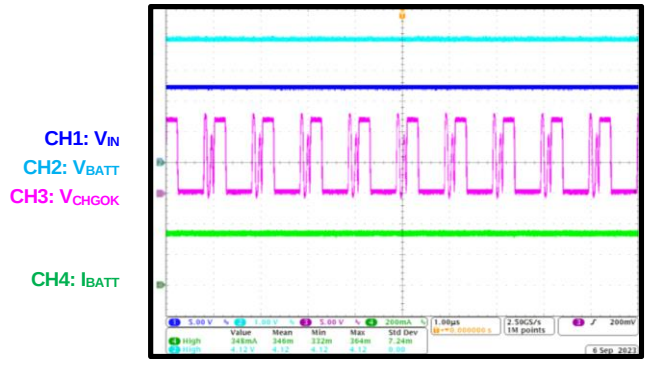

MPS Proprietary Information. Patent Protected. Unauthorized Photocopy and Duplication Prohibited.
© 2024 MPS. All Rights Reserved.

TYPICAL PERFORMANCE CHARACTERISTICS *(continued)*

V_{IN} = 12V, C1 = C2 = 22µF, SEL = GND, CELL = floating, L = 2.2µH, R_{S1} = 47mΩ, battery simulator, T_A = 25°C, unless otherwise noted.

VIN Hot Plug-In

V_{BATT} = 3.7V, V_{IN} = 9V

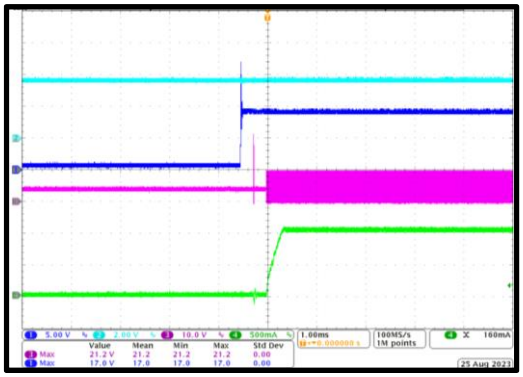

VIN Hot Plug-Out

V_{BATT} = 3.7V, V_{IN} = 9V

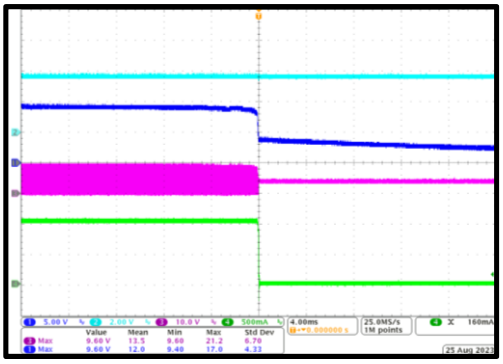

VIN Starts Up Slowly

V_{BATT} = 4.05V

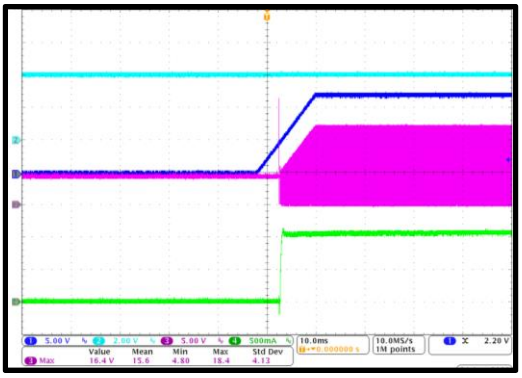

VIN Shuts Down Slowly

V_{BATT} = 4.05V

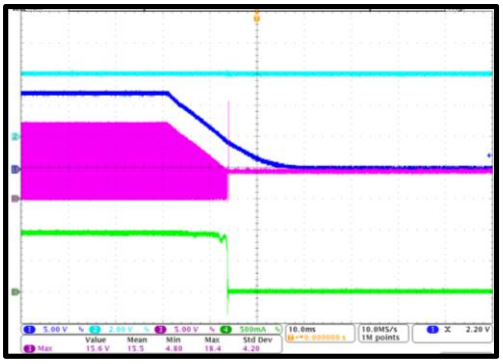

EN On

V_{BATT} = 3.7V

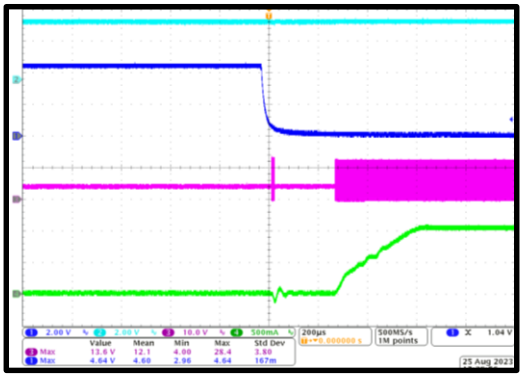

EN Off

V_{BATT} = 3.7V

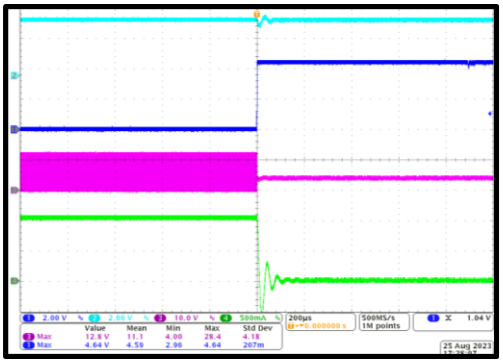

MPS Proprietary Information. Patent Protected. Unauthorized Photocopy and Duplication Prohibited.
© 2024 MPS. All Rights Reserved.

TYPICAL PERFORMANCE CHARACTERISTICS *(continued)*

V_{IN} = 12V, C1 = C2 = 22µF, SEL = GND, CELL = floating, L = 2.2µH, R_{S1} = 47mΩ, battery simulator, T_A = 25°C, unless otherwise noted.

Battery Short Entry

V_{BATT} = 3.7V

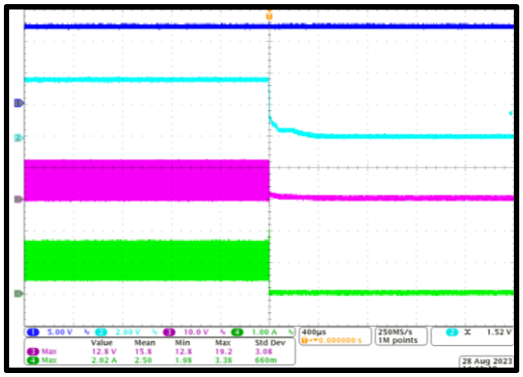

Battery Short Recovery

V_{BATT} = 3.7V

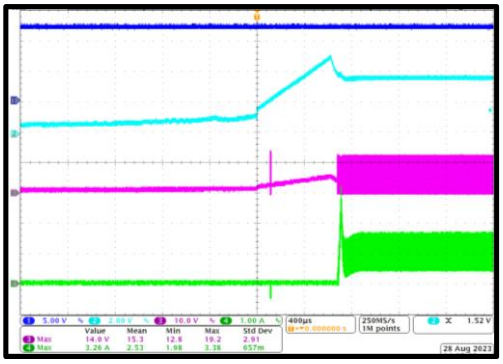

NTC Protection

V_{IN} = 5V, V_{BATT} = 4.05V

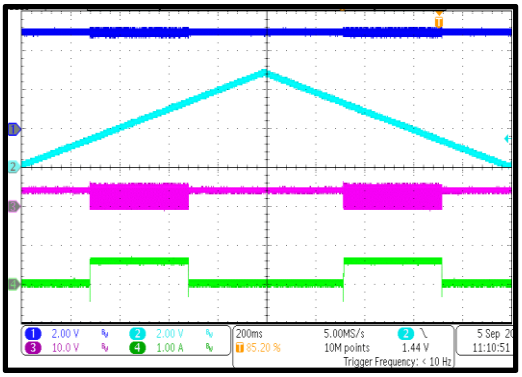

Timer Out

V_{IN} = 5V, V_{BATT} = 3.7V; C_{TMR} = 470pF

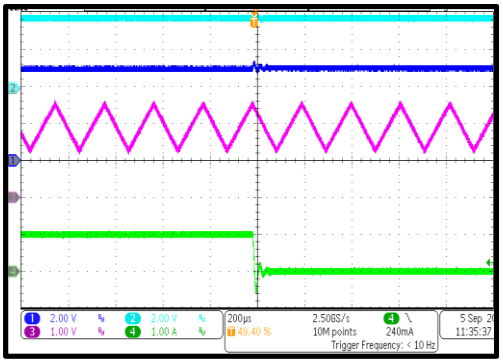

Charge Termination

V_{IN} = 5V, V_{BATT} = 4.05V

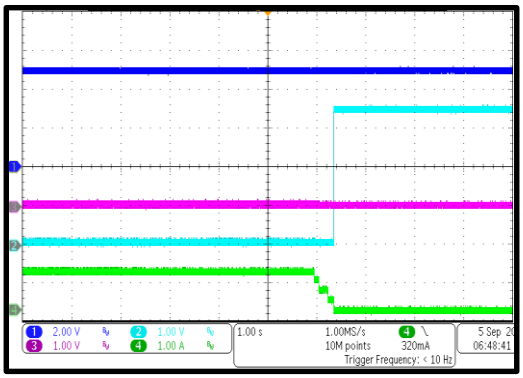

Thermal Shutdown and Recovery

V_{IN} = 5V, V_{BATT} = 3.7V

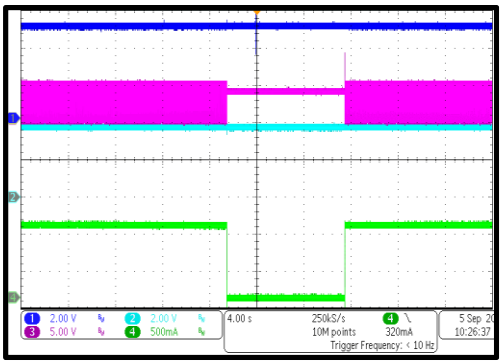

MPS Proprietary Information. Patent Protected. Unauthorized Photocopy and Duplication Prohibited.
© 2024 MPS. All Rights Reserved.

FUNCTIONAL BLOCK DIAGRAM

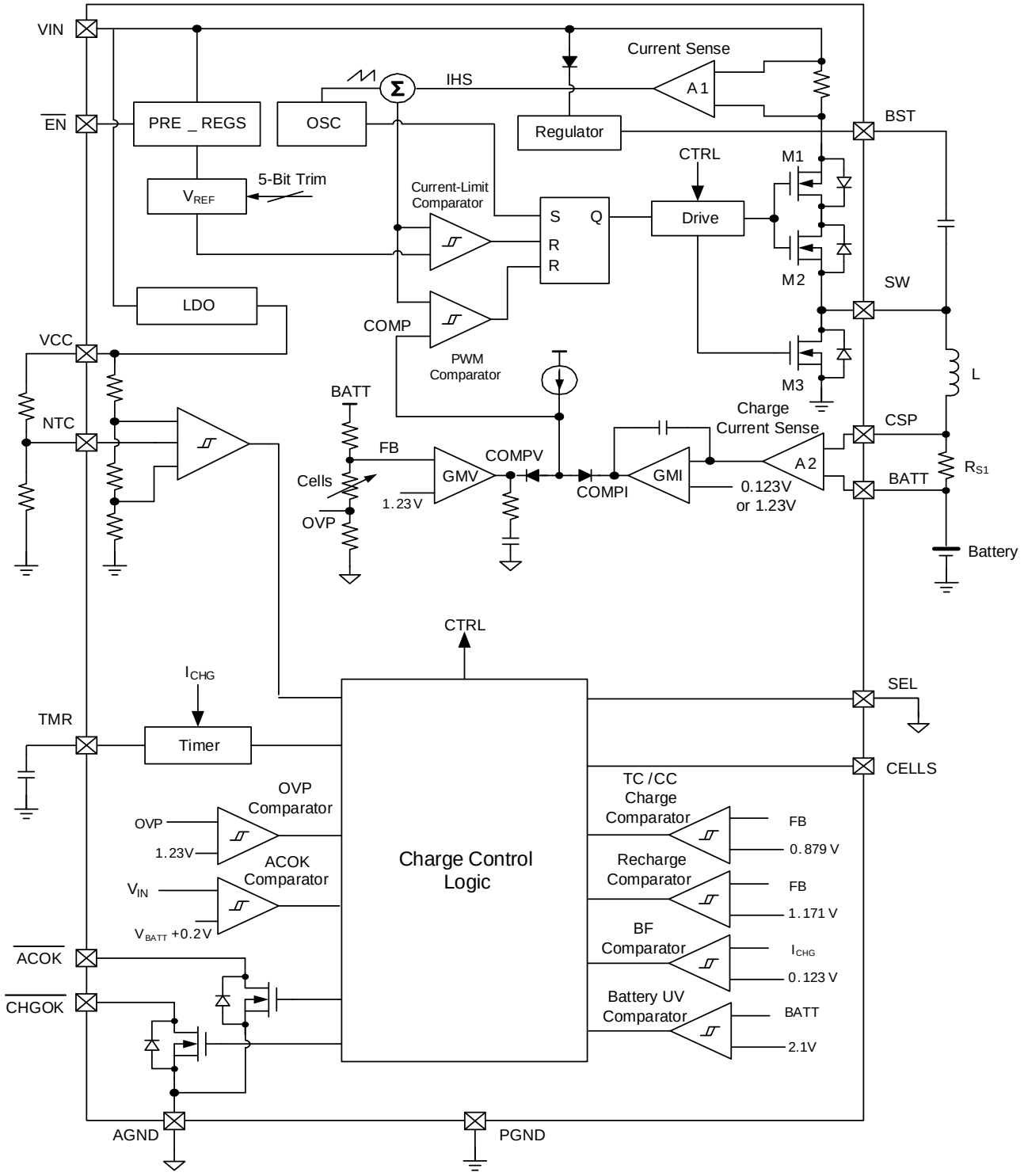

Figure 1: Functional Block Diagram

MPS Proprietary Information. Patent Protected. Unauthorized Photocopy and Duplication Prohibited.
© 2024 MPS. All Rights Reserved.

OPERATION

The MP2615D is a peak current mode control switching charger for 1-cell lithium-ion and lithium-polymer batteries. The MP2615D integrates both the high-side and low-side MOSFETs (HS-FET and LS-FET, respectively) of the synchronous buck converter to provide high efficiency and reduce PCB size.

Charge Cycle (Mode Change: TC to CC to CV)

The MP2615D regulates the charge current (I_{CHG}) and battery voltage (V_{BATT}) using two control loops to achieve highly accurate constant current (CC) charge and constant voltage (CV) charge.

If $V_{BATT_UV} < V_{BATT} < V_{TC}$, the MP2615D stays in trickle charge mode, and the output of the charge current loop (COMPI) dominates the control (see Figure 2). The battery is charged by a trickle charge current (I_{TC}) until the battery voltage reaches V_{TC}. If the charger remains in trickle charge mode until the trickle charge timer is triggered, charging is terminated.

The MP2615D enters CC charge mode once V_{BATT} exceeds V_{TC}. In this mode, the current loop continues dominating the control, and the charge current increases from I_{TC} to I_{CC} to quickly charge the battery.

If the V_{BATT} exceeds the battery-full voltage (V_{BATT_FULL}), the charger enters CV mode. In CV mode, the battery voltage is regulated at V_{BATT_FULL}, and the charge current falls naturally due to the battery's existing equivalent internal resistance. Figure 4 on page 15 shows the operation flowchart.

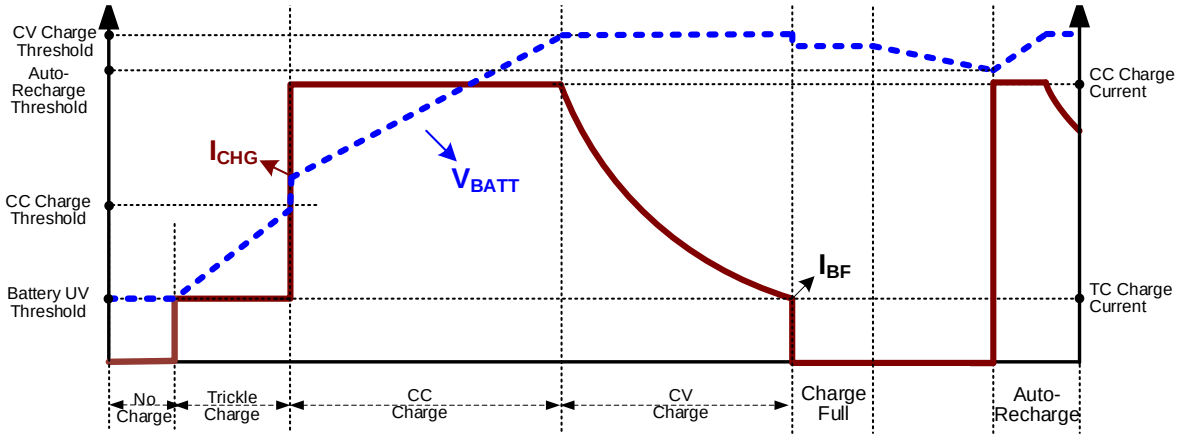

Figure 2: Li-Ion Battery Charge Profile

Charge Full Termination and Auto-Recharge

If the charge current drops below the termination threshold (I_{BF}) during the CV charge phase, the charger stops charging and the $\overline{CHGOK}$ pin becomes an open drain. The timer resets and turns off. Once the battery voltage drops below the recharge threshold (V_{RECH}), recharging automatically begins and the timer restarts a new charge cycle.

Constant-Off-Time (COT) Charge Mode

The MP2615D uses the floating ground method to drive the buck converter's HS-FET. When the HS-FET is off, the BST capacitor is recharged and the voltage across it is used for the HS-FET's gate drive. A minimum off time of 200ns is required to maintain sufficient voltage at the BST capacitor.

If the 200ns minimum off time is reached due to a large duty cycle, the MP2615D enters constant-off-time (COT) charge mode. In this mode, the switching frequency (f_{SW}) is slightly reduced to achieve a 99% duty cycle.

Charge Status Indication

The MP2615D has two open-drain status outputs: the $\overline{CHGOK}$ pin and $\overline{ACOK}$ pin. The $\overline{ACOK}$ pin goes low when the input voltage (V_{IN}) exceeds its under-voltage lockout (UVLO) threshold and exceeds V_{BATT} by 300mV.

$\overline{CHGOK}$ indicates the charge cycle status.

MPS Proprietary Information. Patent Protected. Unauthorized Photocopy and Duplication Prohibited.
© 2024 MPS. All Rights Reserved.

Table 1 shows the operation of both $\overline{CHGOK}$ and $\overline{ACOK}$ according to the charge status.

Table 1: Charging Status Indication

$\overline{ACOK}$	$\overline{CHGOK}$	Charger Status
Low	Low	In charging
Low	High-impedance	• End of charge • V_{BATT} < 2.1V • NTC fault • Timer out • $\overline{EN}$ disabled • Thermal shutdown
High-impedance	High-impedance	• V_{IN} absent • V_{IN} - V_{BATT} < 0.3V

Safety Timer Operation

The MP2615D has an internal safety timer to terminate charging during timeout. The capacitor (C_{TMR}) connected between the TMR pin and GND is used to set the internal oscillator period, calculated with Equation (1):

$$t_P(\text{seconds}) = 0.46 \times C_{TMR}(\mu F) \quad (1)$$

This timer limits the maximum trickle charge time to 8192 internal oscillating periods. If the charger remains in trickle charge mode for longer than the maximum oscillating periods, charging is terminated and $\overline{CHGOK}$ becomes an open drain to indicate a timeout fault. If the charge cycle successfully completes trickle charge within the allowed time limit, it enters CC charge mode and the timer continues to count the oscillating periods. When the battery is fully charged, the timer turns off and clears the counter, waiting for the auto-recharge to restart.

If the charge time during CC/CV mode exceeds 49152 oscillating periods, and the battery-full condition has not been met, charging is terminated and a timeout fault is indicated by floating the $\overline{CHGOK}$ pin. The charger can exit the timeout fault state (and restart on-chip safety timer counting) when one of the following conditions occurs:

- V_{BATT} falls below V_{RECH}
- A power-on-reset (POR) event occurs
- The $\overline{EN}$ pin is toggled

The timer can be disabled by pulling TMR-pin to AGND.

The trickle mode charge time can be estimated with Equation (2):

$$t_{TRICKLE_TMR}(\text{minutes}) = 62.8 \times C_{TMR}(\mu F) \quad (2)$$

If C_{TMR} is 0.47µF, the trickle charge time is about 30 minutes. The CC/CV mode charge time can be calculated with Equation (3):

$$t_{TOTAL_TMR}(\text{hours}) = 6.28 \times C_{TMR}(\mu F) \quad (3)$$

In this case, if C_{TMR} is 0.47µF, the CC/CV charge time is 2.95 hours.

Negative Thermal Coefficient (NTC) Thermistor

The NTC pin allows the MP2615D to sense the battery temperature using the negative thermal coefficient (NTC) resistor in the battery pack. This ensures a safe operating environment for the battery. A resistor with an appropriate value should be connected from the VCC pin to the NTC pin, and the thermistor should be connected from the NTC pin to AGND. The voltage on the NTC pin is determined by the resistor divider, which has a divide ratio that depends on the battery temperature. When the voltage at the NTC pin falls out of the NTC window range, charging pauses until the battery temperature returns to within the normal operating range.

As a result, the MP2615D stops charging and reports this condition to the status pins. The timer is suspended but continues counting from where it left off when charging resumes.

Thermal Shutdown Protection

To prevent the chip from overheating during charging, the MP2615D monitors the die's junction temperature (T_J). If T_J reaches the thermal shutdown threshold (T_{SHTDWN}) of 150°C, the charger converter turns off. Once T_J falls below 130°C, charging restarts.

Battery Under-Voltage Protection (UVP)

When the chip detects that V_{BATT} has fallen below the V_{BATT_UVLO} falling threshold, charging stops. Once V_{BATT} exceeds the V_{BATT_UVLO} rising threshold, charging starts up again.

MPS Proprietary Information. Patent Protected. Unauthorized Photocopy and Duplication Prohibited.
© 2024 MPS. All Rights Reserved.

INPUT START-UP TIMING DIAGRAM

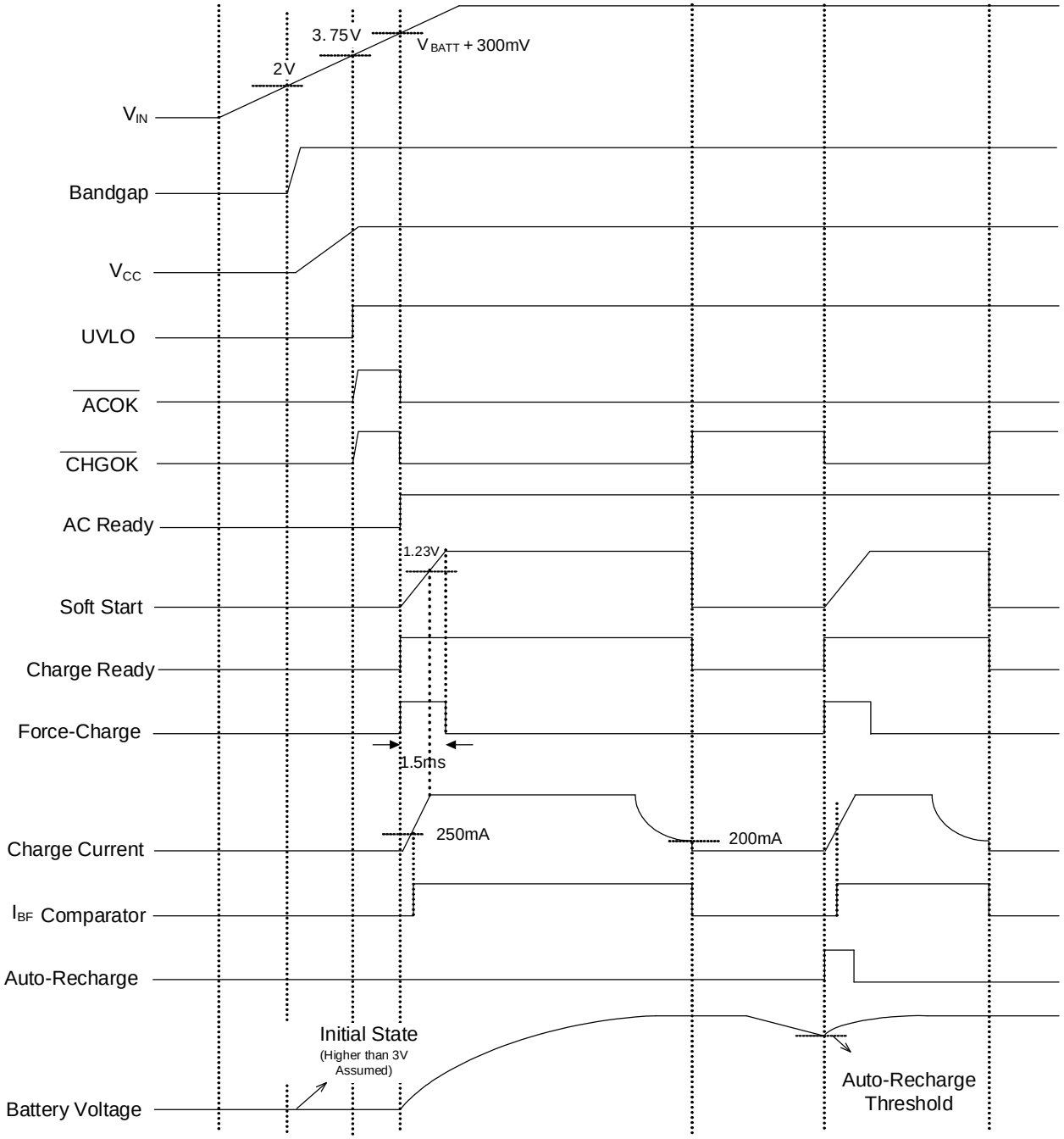

Figure 3: Input Power Start-Up Timing Diagram

MPS Proprietary Information. Patent Protected. Unauthorized Photocopy and Duplication Prohibited.
© 2024 MPS. All Rights Reserved.

OPERATION FLOWCHART

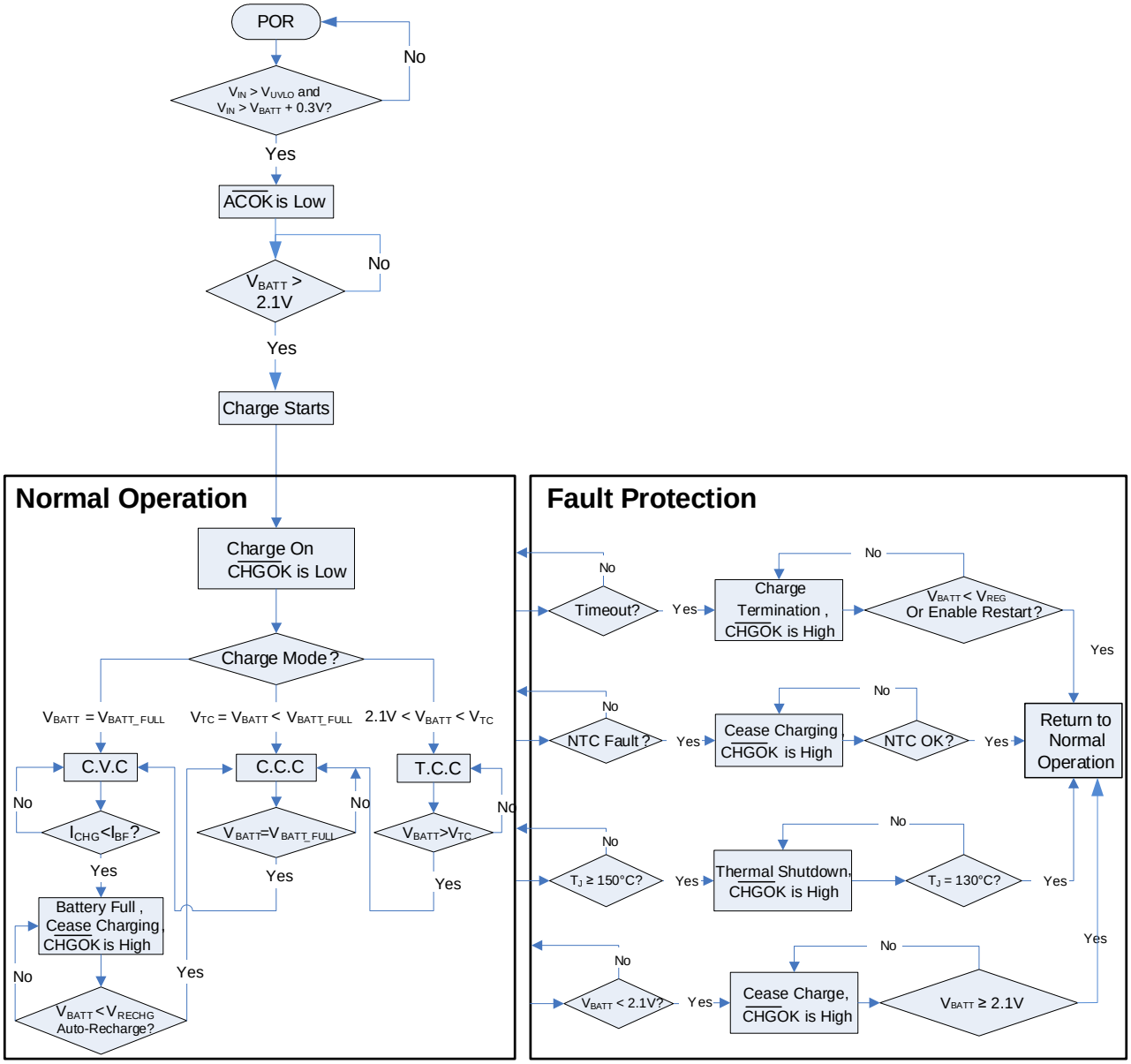

Figure 4: Operation Flowchart

MPS Proprietary Information. Patent Protected. Unauthorized Photocopy and Duplication Prohibited.
© 2024 MPS. All Rights Reserved.

APPLICATION INFORMATION

COMPONENT SELECTION

Charge Current Setting

The constant charge current (I_{CC}) can be set by the current-sense resistor (R_{S1}). The configurable I_{CC} can be estimated with Equation (4):

$$I_{CC} = \frac{47mV}{R_{S1}(m\Omega)}(A) \quad (4)$$

If 1A I_{CC} is 1A, choose R_{S1} to be 47mΩ.

The trickle charge current (I_{TC}) can calculated with Equation (5):

$$I_{TC} = 10\%I_{CC} = \frac{4.7mV}{R_{S1}(m\Omega)}(A) \quad (5)$$

Selecting the Inductor

To select the optimal inductor, a tradeoff should be made between cost, size, and efficiency. A smaller-value inductor has the benefit of a smaller size, but it also has higher ripple currents, magnetic hysteretic losses, and output capacitance. Conversely, a larger-value inductor lowers the ripple current and allows for the use of smaller output filter capacitors, but it also results in higher inductor DC resistance (DCR) loss.

Based on practical experience, the inductor ripple current should not exceed 15% of the maximum charge current under the worst-case conditions. For the MP2615D, with a typical 12V input voltage to charge a 1-cell battery, the maximum inductor current ripple occurs at the corner point between trickle charge and CC charge (V_{BATT} = 3V). Estimate the required inductance with Equation (6):

$$L = \frac{V_{IN}-V_{BATT}}{\Delta I_{L_MAX}} \frac{V_{BATT}}{V_{IN} \times f_{SW}} \quad (6)$$

Where V_{IN} is the input voltage, V_{BATT} is the CC charge threshold, and f_{SW} is the switching frequency.

ΔI_{L_MAX} is the maximum inductor ripple current, which is usually 30% of the CC charge current, calculated with Equation (7):

$$\Delta I_{L_MAX} = 0.30 \times I_{CC} \quad (7)$$

If I_{CC} = 2A, V_{IN} = 12V, V_{BATT} = 3V, and f_{SW} = 1000kHz, the calculated inductance is 3.75μH. The inductor's saturated current must exceed 2.6A and have some tolerance. For V_{IN} = 5V applications, the calculated inductance is 2μH, so select the inductance to be 2.2μH or 3.3μH for the application. To optimize efficiency, choose an inductor with the lowest possible DCR.

Selecting the NTC Resistor Divider

Figure 5 shows how an internal resistor divider sets the cold temperature threshold and hot temperature threshold at 73.3% of V_{CC} and 31.1% of V_{CC}, respectively.

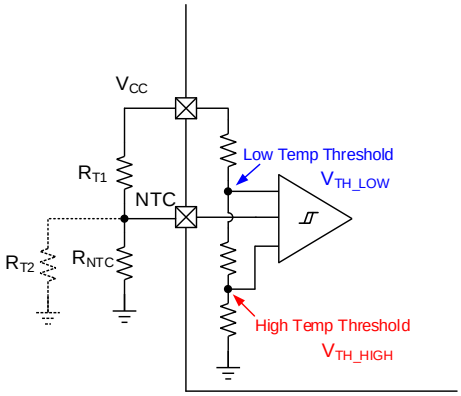

Figure 5: NTC Function Block

For a given NTC thermistor, select the appropriate R_{T1} and R_{T2} to set the NTC window. The thermistor (NCP18XH103) in Figure 5 has the following electrical characteristics:

- At 0°C, R_{NTC_COLD} = 27.445kΩ
- At 50°C, R_{NTC_HOT} = 4.1601kΩ

Assuming that the NTC window is between 0°C and 50°C, the low and high thresholds can be calculated with Equation (8) and Equation (9), respectively:

$$\frac{R_{T2}//R_{NTC_COLD}}{R_{T1}+R_{T2}//R_{NTC_COLD}} = \frac{V_{TH_LOW}}{VREF33} = 73.3\% \quad (8)$$

$$\frac{R_{T2}//R_{NTC_HOT}}{R_{T1}+R_{T2}//R_{NTC_HOT}} = \frac{V_{TH_HIGH}}{VREF33} = 29.3\% \quad (9)$$

The required battery temperature range can be paired with Equation (8) and Equation (9) to calculate R_{T1} and R_{T2}.

MPS Proprietary Information. Patent Protected. Unauthorized Photocopy and Duplication Prohibited.
© 2024 MPS. All Rights Reserved.

Selecting the Input Capacitor

The input capacitor (C1) from the typical application circuit absorbs the maximum ripple current from the buck converter (see Figure 7 on page 19). The maximum ripple current can be estimated with Equation (10):

$$I_{RMS_MAX} = I_{CC} \frac{\sqrt{V_{TC}(V_{IN_MAX}-V_{TC})}}{V_{IN_MAX}} \quad (10)$$

If I_{CC} = 2A, V_{TC} = 3V, and V_{IN_MAX} = 18V, then the maximum ripple current is close to 1A. Select the input capacitors so that the temperature rise due to the ripple current does not exceed 10°C. Use ceramic capacitors with X5R or X7R dielectrics because of their low ESR and small temperature coefficients. For most applications, use a 22µF capacitor.

Selecting the Output Capacitor

The output capacitor (C2) from the typical application circuit is in parallel with the battery (see Figure 7 on page 19). C2 absorbs the high-frequency switching ripple current and smooths the output voltage. Its impedance must be far below that of the battery to ensure that it absorbs the ripple current.

Use a ceramic capacitor because it has lower ESR and smaller size, which allows us to ignore its ESR. The output voltage ripple can be calculated with Equation (11):

$$\Delta R_O = \frac{\Delta V_{OUT}}{V_{OUT}} = \frac{1-\frac{V_{OUT}}{V_{IN}}}{8 \times C2 \times f_{SW}^2 \times L} \quad (11)$$

To guarantee the ±0.5% battery-full voltage accuracy, the maximum output voltage ripple must not exceed 0.5% (e.g. 0.1%). The maximum output voltage ripple occurs at the minimum battery voltage of the CC charge and the maximum input voltage.

If V_{IN_MAX} = 18V, V_{CC_MIN} = V_{TC} = 3V, L = 3.75µH, f_{SW} = 1000kHz, and ΔR_{O_MAX} = 0.2%, then the output capacitance can be estimated with Equation (12):

$$C2 = \frac{1-\frac{V_{TC}}{V_{IN_MAX}}}{8 \times f_{SW}^2 \times L \times \Delta R_{0_MAX}} = 13.8(\mu F) \quad (12)$$

In this scenario, choose a 22µF ceramic capacitor.

MPS Proprietary Information. Patent Protected. Unauthorized Photocopy and Duplication Prohibited.
© 2024 MPS. All Rights Reserved.

PCB Layout Guidelines

Proper PCB layout is vital to meet specified noise, efficiency, and stability requirements. For the best results, refer to Figure 6 and follow the guidelines below:

1. Route the power stages adjacent to their grounds.
2. Minimize the high-side switching node (SW and inductor) trace lengths in the high-current paths and the current-sense resistor trace.
3. Keep the switching node short and route it away from the feedback network.
4. Connect the charge current sense resistor to CSP (pin 10) and BATT (pin 9). Minimize the length and area of this circuit loop.
5. Place the input capacitor as close as possible to the VIN and PGND pins.
6. Place the output inductor close to the IC.
7. Connect the output capacitor between the inductor and PGND of the IC. This minimizes the current path loop area from the SW pin through the LC filter and back to the PGND pin.
8. Connect AGND and PGND at a single point.

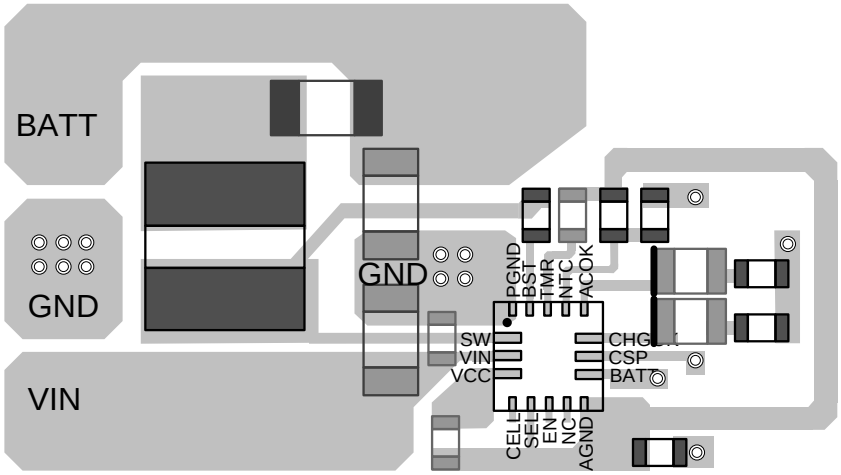

Figure 6: Recommended PCB Layout

MPS Proprietary Information. Patent Protected. Unauthorized Photocopy and Duplication Prohibited.
© 2024 MPS. All Rights Reserved.

TYPICAL APPLICATION CIRCUIT

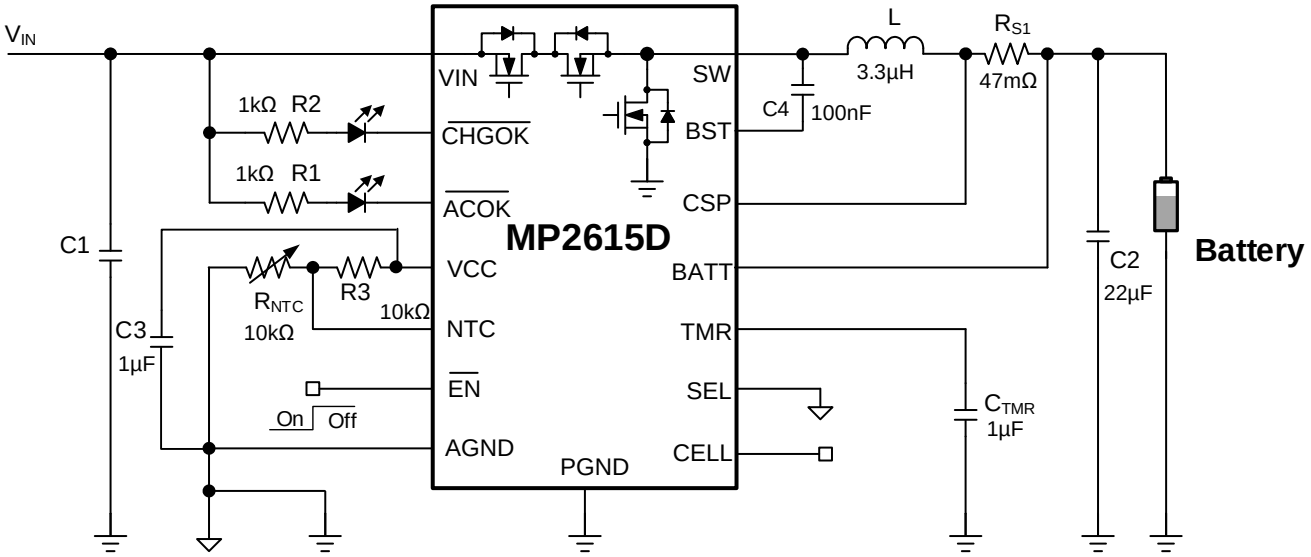

Figure 7: Typical Application Circuit (V_{IN} = 12V)

MPS Proprietary Information. Patent Protected. Unauthorized Photocopy and Duplication Prohibited.
© 2024 MPS. All Rights Reserved.

PACKAGE INFORMATION

QFN-16 (3mmx3mm)

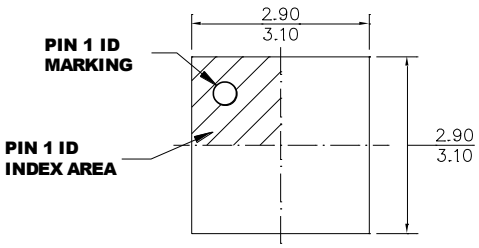

TOP VIEW

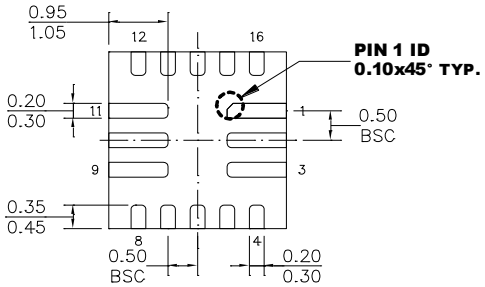

BOTTOM VIEW

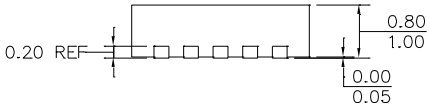

SIDE VIEW

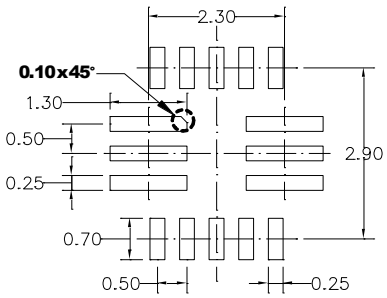

RECOMMENDED LAND PATTERN

NOTE:

1) ALL DIMENSIONS ARE IN MILLIMETERS
2) EXPOSED PADDLE SIZE DOES NOT INCLUDE MOLD FLASH.
3) LEAD COPLANARITY SHALL BE 0.10 MILLIMETERS MAX
4) JEDEC REFERENCE IS MO220.
5) DRAWING IS NOT TO SCALE

MPS Proprietary Information. Patent Protected. Unauthorized Photocopy and Duplication Prohibited.
© 2024 MPS. All Rights Reserved.

CARRIER INFORMATION

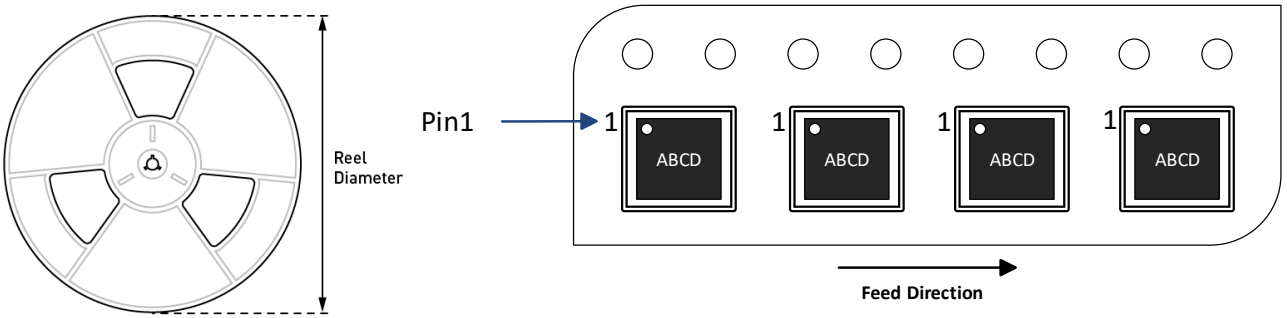

Part Number	Package Description	Quantity/ Reel	Quantity/ Tube	Quantity/ Tray	Reel Diameter	Carrier Tape Width	Carrier Tape Pitch
MP2615DGQ-Z	QFN-16 (3mmx3mm)	5000	N/A	N/A	13in	12mm	8mm

MPS Proprietary Information. Patent Protected. Unauthorized Photocopy and Duplication Prohibited.
© 2024 MPS. All Rights Reserved.

REVISION HISTORY

Revision #	Revision Date	Description	Pages Updated
1.0	5/29/2024	Initial Release	-

Notice: The information in this document is subject to change without notice. Please contact MPS for current specifications. Users should warrant and guarantee that third-party Intellectual Property rights are not infringed upon when integrating MPS products into any application. MPS will not assume any legal responsibility for any said applications.

MPS Proprietary Information. Patent Protected. Unauthorized Photocopy and Duplication Prohibited.
© 2024 MPS. All Rights Reserved.