Data sheet

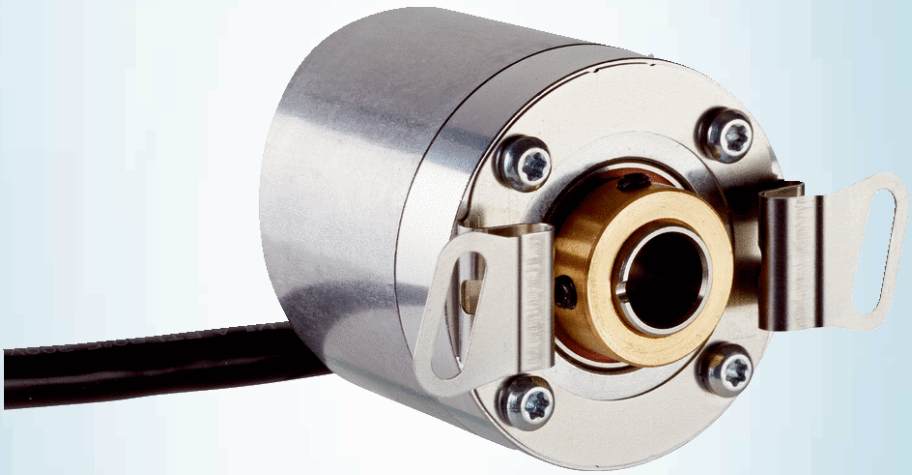

DBS36E-BBAM01024

DBS36/50

INCREMENTAL ENCODERS

SICK
Sensor Intelligence.

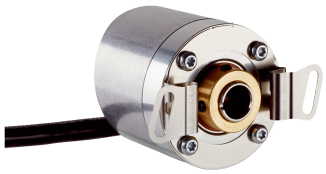

Illustration may differ

Ordering information

Type	part no.
DBS36E-BBAM01024	1065219

Other models and accessories ➜ www.sick.com/DBS36_50

Detailed technical data

Safety-related parameters

$MTTF_D$ (mean time to dangerous failure)	600 years (EN ISO 13849-1) [1]

[1] This product is a standard product and does not constitute a safety component as defined in the Machinery Directive. Calculation based on nominal load of components, average ambient temperature 40 °C, frequency of use 8760 h/a. All electronic failures are considered hazardous. For more information, see document no. 8015532.

Performance

Pulses per revolution	1,024
Measuring step	90°, electric/pulses per revolution
Measuring step deviation	± 18° / pulses per revolution
Error limits	± 54° / pulses per revolution
Duty cycle	≤ 0.5 ± 5 %

Interfaces

Communication interface	Incremental
Communication Interface detail	TTL / RS-422
Number of signal channels	6-channel
Initialization time	< 3 ms
Output frequency	≤ 300 kHz
Load current	≤ 30 mA
Operating current	≤ 50 mA (without load)

Electronics

Connection type	Cable, 8-wire, universal, 5 m
Supply voltage	4.5 ... 5.5 V
Reference signal, number	1
Reference signal, position	90°, electric, logically gated with A and B
Short-circuit protection of the outputs	✓ [1]

[1] The short-circuit rating is only given if Us and GND are connected correctly.

Mechanics

Mechanical design	Blind hollow shaft
Shaft diameter	8 mmFront clamp [1]
Weight	+ 150 g (with connecting cable)
Shaft material	Stainless steel
Flange material	Aluminum
Housing material	Aluminum
Material, cable	PVC
Start up torque	+ 0.5 Ncm (+20 °C)
Operating torque	0.4 Ncm (+20 °C)
Permissible movement static	± 0.3 mm (radial) ± 0.5 mm (axial) [2]
Permissible movement dynamic	± 0.1 mm (radial) ± 0.2 mm (axial) [2]
Operating speed	6,000 min^{-1} [3]
Maximum operating speed	≤ 8,000 min^{-1} [4]
Moment of inertia of the rotor	0.8 gcm^2
Bearing lifetime	2 x 10^9 revolutions
Angular acceleration	≤ 500,000 rad/s^2

[1] Order collets for 5 mm, 6 mm and 1/4" mm separately as accessories.
[2] Higher values are possible using limited bearing life.
[3] Allow for self-heating of 4.7 K per 1,000 rpm when designing the operating temperature range.
[4] No permanent operation. Decreasing signal quality.

Ambient data

EMC	According to EN 61000-6-2 and EN 61000-6-3 (class A)
Enclosure rating	IP65
Permissible relative humidity	90 % (Condensation not permitted)
Operating temperature range	–20 °C ... +85 °C, –35 °C ... +95 °C on request
Storage temperature range	–40 °C ... +100 °C, without package
Resistance to shocks	100 g, 6 ms (EN 60068-2-27)
Resistance to vibration	20 g, 10 Hz ... 2,000 Hz (EN 60068-2-6)

Classifications

ECLASS 5.0	27270501
ECLASS 5.1.4	27270501
ECLASS 6.0	27270590
ECLASS 6.2	27270590
ECLASS 7.0	27270501
ECLASS 8.0	27270501
ECLASS 8.1	27270501
ECLASS 9.0	27270501
ECLASS 10.0	27270501
ECLASS 11.0	27270501

ECLASS 12.0	27270501
ETIM 5.0	EC001486
ETIM 6.0	EC001486
ETIM 7.0	EC001486
ETIM 8.0	EC001486
UNSPSC 16.0901	41112113

Certificates

EU declaration of conformity	✓
UK declaration of conformity	✓
ACMA declaration of conformity	✓
China-RoHS	✓
cRUus certificate	✓

Dimensional drawing Blind hollow shaft, cable

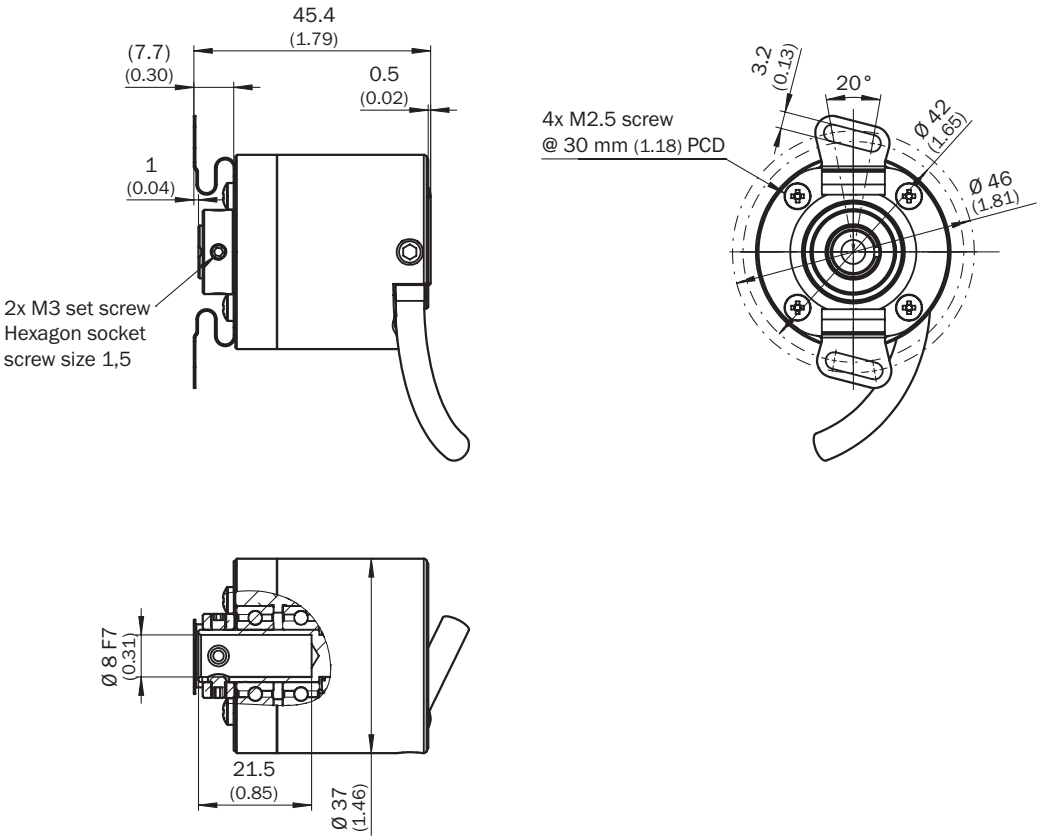

Dimensions in mm (inch)

Attachment specifications

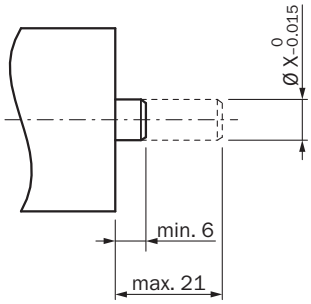

	Encoder	
6 mm	DBS36E-BA	2056390Premounted
5 mm	DBS36E-BB	2066991
6 mm		2056390
1/4″		On request
8 mm		Not required

PIN assignment

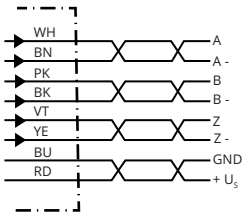

Wire colors (cable connection)	Male connector M12, 8-pin	Male connector M23, 12-pin	TTL/HTL 6-channel signal	Explanation
Brown	1	6	A-	Signal wire
White	2	5	A	Signal wire
Black	3	1	B-	Signal wire
Pink	4	8	B	Signal wire
Yellow	5	4	Z-	Signal wire
Purple	6	3	Z	Signal wire
Blue	7	10	GND	Ground connection
Red	8	12	$+U_s$	Supply voltage
-	-	9	Not assigned	Not assigned
-	-	2	Not assigned	Not assigned
-	-	11	Not assigned	Not assigned
-	-	7	Not assigned	Not assigned

Diagrams Signal outputs for electrical interfaces TTL and HTL

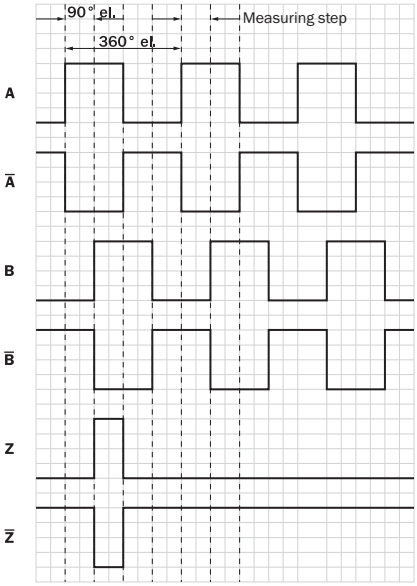

Cw with view on the encoder shaft in direction "A", compare dimensional drawing.
① Interfaces G, P, R only for channels A, B, Z.

Supply voltage	Output
4.5 V...5.5 V	TTL/RS422
7 V...30 V	TTL/RS422
7 V...30 V	HTL/Push Pull
7 V...27 V	HTL/push pull, 3 channel
4.5 V...5.5 V	Open Collector NPN, 3 channel
4.5 V...30 V	Open Collector NPN, 3 channel

Operation note Zero pulse explanation

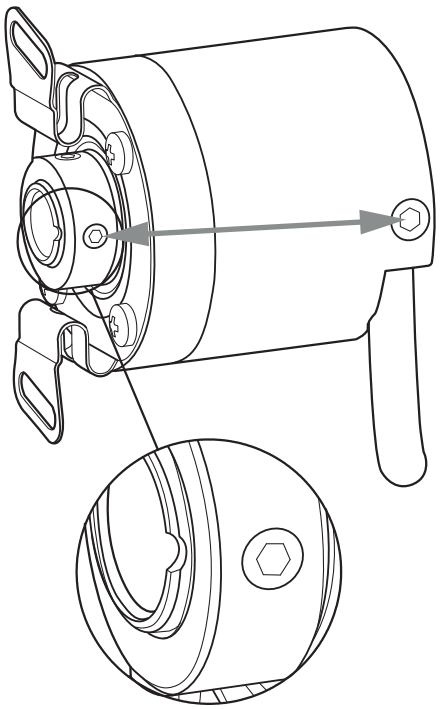

Recommended accessories

Other models and accessories ➜ www.sick.com/DBS36_50

	Brief description	Type	part no.
connectors and cables			
	• **Connection type head A:** Flying leads • **Connection type head B:** Flying leads • **Signal type:** SSI, Incremental, HIPERFACE® • **Items supplied:** By the meter • **Cable:** 8-wire, PUR, halogen-free • **Description:** SSI, shielded, Incremental, HIPERFACE®	LTG-2308-MWENC	6027529
	• **Connection type head A:** Flying leads • **Connection type head B:** Flying leads • **Signal type:** SSI, Incremental • **Items supplied:** By the meter • **Cable:** 11-wire, PUR • **Description:** SSI, shielded, Incremental	LTG-2411-MW	6027530
	• **Connection type head A:** Flying leads • **Connection type head B:** Flying leads • **Signal type:** SSI, Incremental • **Items supplied:** By the meter • **Cable:** 12-wire, PUR, halogen-free • **Description:** SSI, shielded, Incremental	LTG-2512-MW	6027531
	• **Connection type head A:** Flying leads • **Connection type head B:** Flying leads • **Signal type:** SSI, TTL, HTL, Incremental • **Items supplied:** By the meter • **Cable:** 12-wire, UV and saltwater-resistant, PUR, halogen-free • **Description:** SSI, shielded, TTL, HTL, Incremental	LTG-2612-MW	6028516
	• **Connection type head A:** Male connector, M12, 8-pin, straight, A-coded • **Signal type:** Incremental • **Cable:** CAT5, CAT5e • **Description:** Incremental, shielded • **Connection systems:** IDC quick connection • **Permitted cross-section:** 0.14 mm² ... 0.34 mm²	STE-1208-GA01	6044892
	• **Connection type head A:** Male connector, M23, 12-pin, straight, A-coded • **Signal type:** HIPERFACE®, SSI, Incremental • **Description:** HIPERFACE®, shieldedSSIIncremental • **Connection systems:** Solder connection	STE-2312-GX	6028548
	• **Connection type head A:** Male connector, M23, 12-pin, straight, A-coded • **Signal type:** HIPERFACE®, SSI, Incremental • **Description:** HIPERFACE®, shieldedSSIIncremental • **Connection systems:** Solder connection	STE-2312-G01	2077273
Mounting systems			
	• **Product family:** Stator couplings • **Description:** Two-sided stator coupling, screw hole diameter 42 to 46 mm, slot width 3.2 mm	BEF-DS-DBS36	2066301

SICK AT A GLANCE

SICK is one of the leading manufacturers of intelligent sensors and sensor solutions for industrial applications. A unique range of products and services creates the perfect basis for controlling processes securely and efficiently, protecting individuals from accidents and preventing damage to the environment.

We have extensive experience in a wide range of industries and understand their processes and requirements. With intelligent sensors, we can deliver exactly what our customers need. In application centers in Europe, Asia and North America, system solutions are tested and optimized in accordance with customer specifications. All this makes us a reliable supplier and development partner.

Comprehensive services complete our offering: SICK LifeTime Services provide support throughout the machine life cycle and ensure safety and productivity.

For us, that is “Sensor Intelligence.”

WORLDWIDE PRESENCE:

Contacts and other locations –www.sick.com