770144-5 ✔ ACTIVE

Commercial Pin and Socket Connectors

TE Internal #: 770144-5

Gold (Au), Socket Contact, 20 – 14 AWG, 250 VAC / 600 VAC, .5 – 2 mm² Wire, Locking Lance Contact Retention, Commercial Pin and Socket Connectors

View on TE.com >

Connectors > Contacts > Connector Contacts

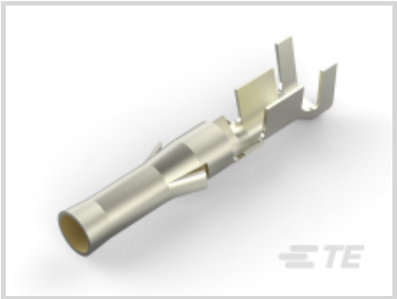

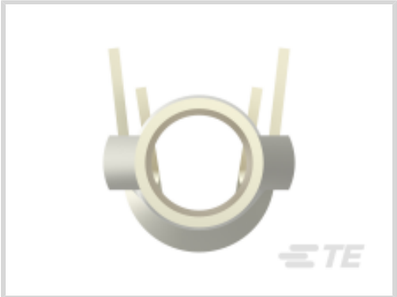

Contact Type: **Socket**

Contact Mating Area Plating Material: **Gold (Au)**

Wire Contact Termination Area Plating Material: **Nickel**

Operating Voltage: **250 VAC, 600 VAC**

Contact Retention Within Housing: **With**

Features

Product Type Features

Discrete Wire Type	Stranded

Electrical Characteristics

Operating Voltage	250 VAC, 600 VAC

Contact Features

Contact Type	Socket
Contact Mating Area Plating Material	Gold (Au)
Wire Contact Termination Area Plating Material	Nickel
Contact Retention Within Housing	With
Contact Base Material	Brass
Contact Current Rating (Max)	13 A
Mating Pin Diameter	2.36 mm[.093 in]
Contact Mating Area Plating Material Thickness	.76 µm[30 µin]
Wire Contact Termination Area Plating Thickness	1.27 µm[50 µin]
Wire Contact Termination Area Plating Material Finish	Matte

Contact Orientation	Straight
Contact Underplating Material	Nickel
Contact Underplating Material Thickness	1.27 µm[50 µin]

Termination Features

Termination Method to Wire & Cable	Crimp
Product Terminates To	Wire & Cable

Mechanical Attachment

Contact Retention Type Within Housing	Locking Lance
Wire Insulation Support	Without

Dimensions

Wire Size	.5 – 2 mm²
Compatible Insulation Diameter Range	3.56 mm[.14 in]

Usage Conditions

Operating Temperature Range	-55 – 105 °C[-67 – 221 °F]

Operation/Application

Circuit Application	Power

Industry Standards

Compatible With Agency/Standards Products	CSA, UL

Packaging Features

Packaging Quantity	1000
Packaging Method	Bag

Product Compliance

For compliance documentation, visit the product page on TE.com>

EU RoHS Directive 2011/65/EU	Compliant
EU ELV Directive 2000/53/EC	Compliant
China RoHS 2 Directive MIIT Order No 32, 2016	No Restricted Materials Above Threshold
EU REACH Regulation (EC) No. 1907/2006	Current ECHA Candidate List: JUNE 2025 (250) Candidate List Declared Against: JUNE 2025 (250) Does not contain REACH SVHC
Halogen Content	Low Halogen - Br, Cl, F < 900 ppm per homogenous material. Also BFR/CFR/PVC

	Free
Solder Process Capability	Not applicable for solder process capability

Product Compliance Disclaimer

This information is provided based on reasonable inquiry of our suppliers and represents our current actual knowledge based on the information they provided. This information is subject to change. The part numbers that TE has identified as EU RoHS compliant have a maximum concentration of 0.1% by weight in homogenous materials for lead, hexavalent chromium, mercury, PBB, PBDE, DBP, BBP, DEHP, DIBP, and 0.01% for cadmium, or qualify for an exemption to these limits as defined in the Annexes of Directive 2011/65/EU (RoHS2). Finished electrical and electronic equipment products will be CE marked as required by Directive 2011/65/EU. Components may not be CE marked. Additionally, the part numbers that TE has identified as EU ELV compliant have a maximum concentration of 0.1% by weight in homogenous materials for lead, hexavalent chromium, and mercury, and 0.01% for cadmium, or qualify for an exemption to these limits as defined in the Annexes of Directive 2000/53/EC (ELV). Regarding the REACH Regulation, the information TE provides on SVHC in articles for this part number is based on the latest European Chemicals Agency (ECHA) 'Guidance on requirements for substances in articles' posted at this URL: https://echa.europa.eu/guidance-documents/guidance-on-reach

Compatible Parts

TE Part # 318837-1
EXTRACTION TOOL ASSEMBLY

TE Part # 770264-1
03P .093 COMM P&S RECPT

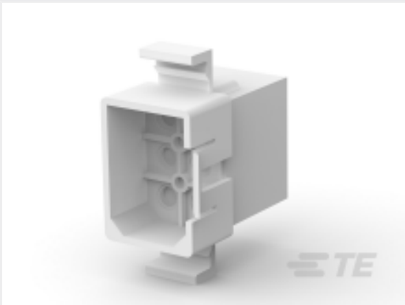

TE Part # 770373-1
06P .093 COMM P&S PLUG .250CL

TE Part # 770091-1
09P .093 COMM P&S RECPT HSG

TE Part # 770087-1
06P .093 COMM P&S RECPT HSG

TE Part # 770103-1
15P .093 COMM P&S RECPT

TE Part # 770094-1
09P .093 COMM P&S RECPT

TE Part # 770842-1
04P .093 COMM P&S PLUG

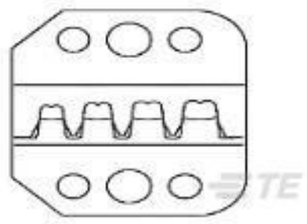

TE Part # 90871-2
PROCRIMP DIE COMM .093 PIN/SOC

TE Part # 770338-1
03P .093 COMM P&S PLUG .250CL

TE Part # 770100-1
12P .093 COMM P&S RECPT

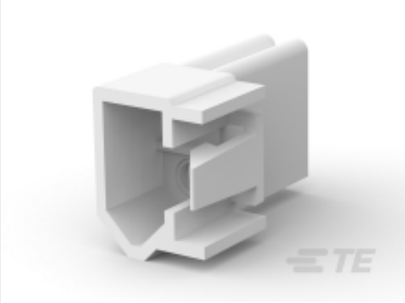

TE Part # 770425-1
02P .093 COMM P&S PLUG .248CL

TE Part # 770783-1
03P .093 COMM P&S PLUG .248CL

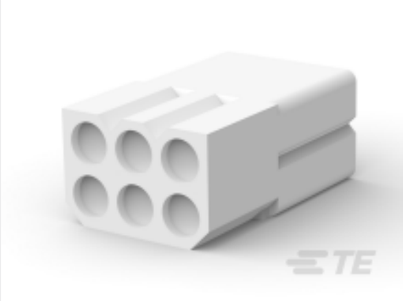

TE Part # 770088-1
06P .093 COMM P&S RECPT HSG

TE Part # 770093-1
09P .093 COMM P&S RECPT

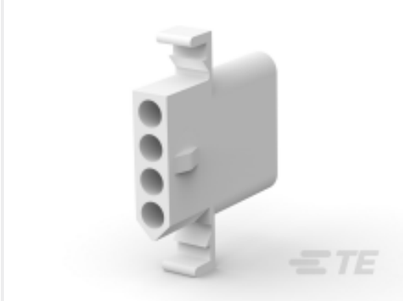

TE Part # 770076-1
04P .093 COMM P&S RECPT HSG

TE Part # 770097-1
12P .093 COMM P&S RECPT

TE Part # 770336-1
04P .093 COMM P&S PLUG .250CL

TE Part # 770785-1
03P .093 COMM P&S RECPT .248CL

TE Part # 770071-1
03P .093 COMM P&S RECPT HSG

Also in the Series | Commercial Pin and Socket Connectors

Connector Contacts(41)

Insertion & Extraction Tools(3)

Power Contacts(39)

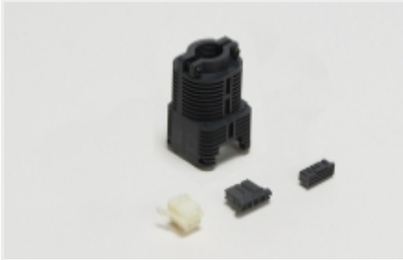

Rectangular Connector Housings(94)

Rectangular Power Connectors(94)

Standard Circular Connectors(1)

Standard Rectangular Connectors(94)

Customers Also Bought

TE Part #801402-SF
FN282-10-06

TE Part #L9000026-01
Antenna 1/4 Wave R-Angle 2.4GHz SMA

TE Part #T4010008041-000
M8,SCREW, FEMALE,S,UNSHIELD,4P, GOLD

TE Part #CONSMA008-G
SMA Jack 50 Ohm Through Hole PCB

TE Part #54010-1
CPC STRAIN RELIEF,SIZE 11

TE Part #54011-1
CPC STRAIN RELIEF,SIZE 17

TE Part #206485-1
CPC PLUG ASSEMBLY SIZE 11-9

TE Part #211398-4
CPC RECPT. SIZE 13-7,THRD INST

TE Part #1838891-2
M12 Mtl FEMALE PNL CONN. Sldr Rear (Hex)

TE Part #6-1879350-7
RR01 5% 120R AMMO

Documents

Product Drawings

.093 CP&S SOC AUBR L/P 20-14

English

CAD Files

3D PDF

3D

Customer View Model

ENG_CVM_CVM_770144-5_C.2d_dxf.zip

English

Customer View Model

ENG_CVM_CVM_770144-5_C.3d_igs.zip

English

Customer View Model

ENG_CVM_CVM_770144-5_C.3d_stp.zip

English

3D PDF

English

Customer View Model

ENG_CVM_770144-5_F.2d_dxf.zip

English

Customer View Model

ENG_CVM_770144-5_F.3d_igs.zip

English

Customer View Model

ENG_CVM_770144-5_F.3d_stp.zip

English

By downloading the CAD file I accept and agree to the Terms and Conditions of use.

Datasheets & Catalog Pages

SOFT_SHELL_PIN_SOCKET_CONNECTORS_STANDARD_DENSITY

English

Product Specifications

Application Specification

English