

Ultrasonic sensor

UC10000-F260-IE9R2

- Large sensing range
- Adjustable Bracket
- Programmable by means of Interface (see accessories) and SONPROG
- Analog output 4 ... 20 mA
- 2 switch outputs
- Synchronization options
- Temperature compensation

Single head system

Function

This ultrasonic sensor is a contactless distance sensor based on the echo run time principle. It is suitable for the detection of solid, liquid or powder sound-reflecting objects.
The unique sensor design allows easy movement of the direction of sound radiation in all spatial directions by up to 10° without additional an additional assembly device.

Dimensions

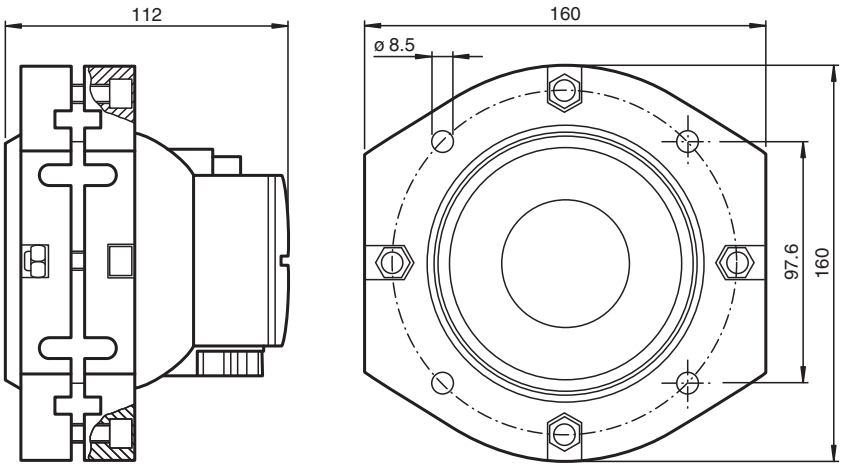

Technical Data

General specifications		
Sensing range		800 ... 10000 mm
Adjustment range		800 ... 10000 mm
Dead band		0 ... 800 mm
Standard target plate		100 mm x 100 mm
Transducer frequency		approx. 60 kHz
Nominal ratings		
Time delay before availability	t_v	280 ms
Limit data		
Permissible cable length		max. 300 m
Indicators/operating means		
LED yellow		solid: switching state switch output flashing: misadjustment

Release date: 2025-06-18 Date of issue: 2025-06-18 Filename: 250791_eng.pdf

Technical Data

Electrical specifications		
Rated operating voltage	U_e	24 V DC
Operating voltage	U_B	15 ... 30 V (including ripple) In supply voltage interval 15 ... 20 V sensitivity reduced to 20% ... 0%
Ripple		≤ 10 %
No-load supply current	I_0	≤ 75 mA
Input/Output		
Input/output type		1 synchronization connection, bidirectional
0 Level		≤ 3 V
1 Level		15 ... 30 V
Input impedance		typ. 0.9 kΩ
Number of sensors		max. 10
Switching output		
Output type		2 switch outputs PNP, NC
Repeat accuracy	R	± 15 mm
Operating current	I_L	150 mA , short-circuit/overload protected
Voltage drop		≤ 3 V
Switch-on delay		800 ms
Analog output		
Output type		1 current output 4 ... 20 mA rising ramp
Default setting		800 ... 10000 mm
Linearity error		≤ 1.5 %
Load resistor		≤ 300 Ω
Compliance with standards and directives		
Standard conformity		
Standards		EN IEC 60947-5-2:2020 IEC 60947-5-2:2019 EN 60947-5-7:2003 IEC 60947-5-7:2003
Approvals and certificates		
UL approval		cULus Listed, General Purpose
CCC approval		CCC approval / marking not required for products rated ≤36 V
Ambient conditions		
Ambient temperature		-25 ... 70 °C (-13 ... 158 °F)
Storage temperature		-40 ... 85 °C (-40 ... 185 °F)
Shock resistance		30 g , 11 ms period
Vibration resistance		10 ... 55 Hz , Amplitude ± 1 mm
Mechanical specifications		
Connection type		screw terminals , PG 13.5 cable gland
Degree of protection		IP65
Material		
Housing		UP 1225 SF/R8
Transducer		epoxy resin/hollow glass sphere mixture; polyurethane foam
Installation position		any position
Mass		1800 g
Dimensions		
Depth		112 mm
Diameter		160 mm

Release date: 2025-06-18 Date of issue: 2025-06-18 Filename: 250791_eng.pdf

Connection

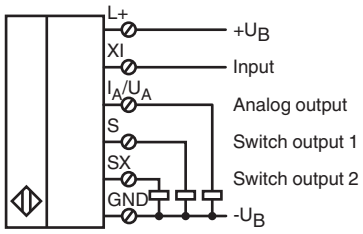

Characteristic Curve

Characteristic response curve

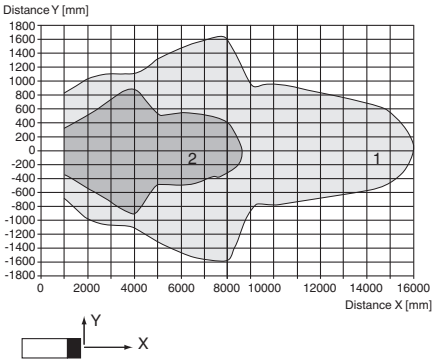

Curve 1: flat surface 100 mm x 100 mm
Curve 2: round bar, Ø 25 mm

Area definitions

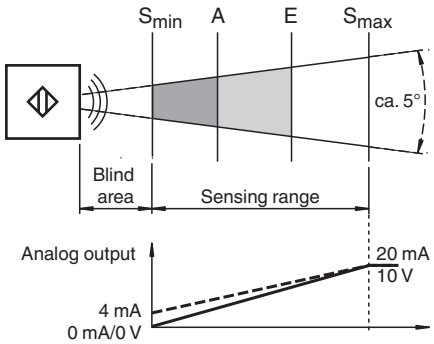

Release date: 2025-06-18 Date of issue: 2025-06-18 Filename: 250791_eng.pdf

Additional Information

Danger!
This product must not be used in applications in which the safety of persons depends on the device function.
This product is not a safety component in accordance with the EU Machinery Directive.

Assembly and connection

When installing the sensor, make sure that the space filled by the sound cone is free from interfering objects. Objects in the blind zone cause cause false signals. Implement suitable measures to ensure that objects cannot enter the blind zone.
The electrical connection is made via screw terminals. The connections are protected against reverse polarity, short circuits and overloads. Shielded cables are recommended if there is electrical interference.

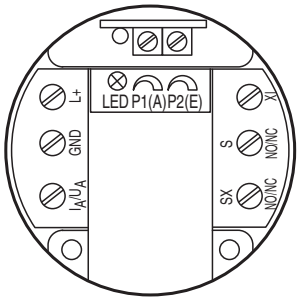

Setting

The detection range limits S_{min} and S_{max} are fixed (see Technical data). Within these limits, the switch points A and E are set using a potentiometer. Switch point A must be smaller than switch point E. If this is not the case, the LED flashes and correct switching is not possible.

Parameterisation via SONPROG

The following parameters can be changed via the SONPROG parameterisation software:

- Measuring range limits S_{min} and S_{max}
- Switch-on and switch-off points E and A
- Blind zone
- Averaging
- Analogue limits
- Analogue characteristic, rising/falling

Operation

Within the detection range, which is restricted by the detection range limits S_{min} and S_{max}, the object distance is detected. Objects with an even, smooth surface can have a maximum inclination of 3° to the direction of sound propagation. With rough, uneven surfaces the angular deviation can be bigger. The actual value depends signficantly on the object finish and should be obtained experimentally if necessary.

Behaviour of the switch outputs:

- If the object is at a distance > E, both switch outputs are in standby mode.
- If the object is between E and A, switch output S is activated and switch output SX is in standby mode.
- If the object is at a distance < A, switch output SX is activated and switch output S is in standby mode.

Behaviour of the analogue output:

The object distance between the detection range limits (S_{min}, S_{max}) are displayed in the form of an analogue output signal at the analogue output. The analogue output delivers its minimum value at distance S_{min} and its maximum value at distance S_{max}. The characteristic between the two measuring range limits is linear. Outside of S_{max} the analogue output retains its maximum value.

Display:

The sensor has an LED. It lights up continuously when the output terminal S is carrying a voltage. It flashes when switch points A and E are set incorrectly (see Setting).

Function input XI

The sensor is placed in standby mode by connecting a low level at the function input XI (blocked release). The sensors then performs no measurements. The switch outputs retain the most recent status. As soon as function input XI is disconnected from the low level or a high level is connected (release), the sensor resumes its normal function after the release period has expired.
The function input XI can be used during operation for the synchronisation of multiple sensors in the event of mutual interefence. The following synchronisation modes are possible:

- Triggering of each individual sensor with a separate control signal, e.g. by a PLC (external synchronisation).
- Connection of the function inputs XI of all sensors and joint triggering with an external control signal, e.g. by a PLC (external synchronisation, common-mode operation).
- Connection of the function inputs XI of all sensors and without triggering with an external signal (internal synchronisation, multiplex mode).

Maintenance

The ultrasonic sensor is maintenance-free. However, the converter surface must not be wet, damaged, painted or covered with material deposits..

Connection Assignment

Connecting the PC interface 3RX4000-PF to use SONPROG

This sensor can be parameterised using SONPROG for an optimum adaptation to the application. Therefore the sensor provides communication with the 3RX4000-PF PC interface. To connect to the 3RX4000-PF PC interface a 4- or 5-pin M12 male cable connector is reqired. We recommend e. g. an adapter V1-M20-80 or a cable connector V15S-G-2M-PVC.
Please connect the wires to the sensors terminals as shown, below.

Release date: 2025-06-18 Date of issue: 2025-06-18 Filename: 250791_eng.pdf

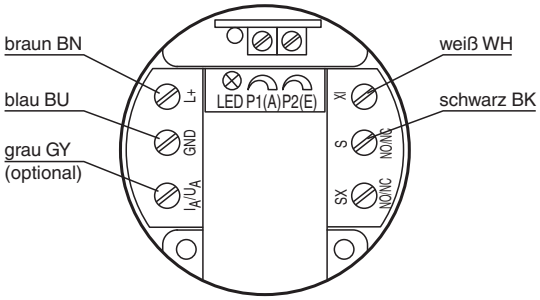

The terminals I_A/U_A (analog output) and SX (2nd switching output) are not needed for programming.

Release date: 2025-06-18 Date of issue: 2025-06-18 Filename: 250791_eng.pdf