CUI Devices is now Same Sky! Learn More

MODEL: PJ-077 | DESCRIPTION: DC POWER JACK

FEATURES

- spring terminals
- low profile
- no internal switch



RoHS

SPECIFICATIONS

parameter	conditions/description	min	typ	max	units
rated input voltage			24		Vdc
rated input current				1	A
contact resistance[1]	between terminal and mating plug between terminal in a closed circuit			50 30	mΩ mΩ
insulation resistance	at 500 Vdc	100			MΩ
voltage withstand	for 1 minute			500	Vac
insertion/withdrawal force		0.3		3	kg
operating temperature		-25		85	°C
life	at a rate of 24 cycles/minute		5,000		cycles
flammability rating	UL94V-0				
RoHS	yes				

Note:
1. When measured at a current of less than 100 mA/1 kHz
2. All specifications measured at 10~35°C, humidity at 45~85%, under standard atmospheric pressure, unless otherwise noted.

DISCONTINUED

MECHANICAL DRAWING

units: mm[inches]

TOLERANCE:
X.X ±0.2mm
X.XX ±0.1mm
X.XXX ±0.05mm

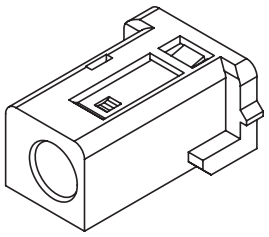

	MATERIAL	PLATING
terminal 1	copper alloy	gold flash
terminal 2	copper alloy	gold flash
plastic	PA6T or equivalent	

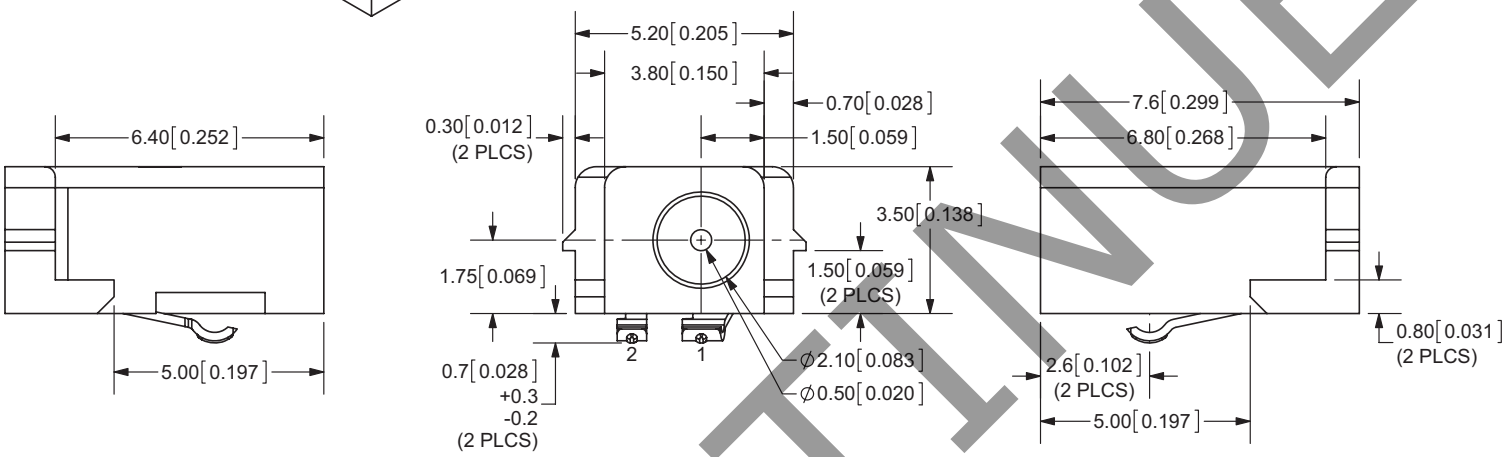

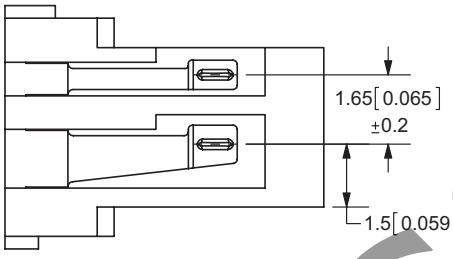

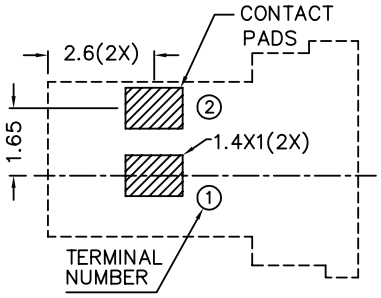

Recommended PCB Layout
Top View

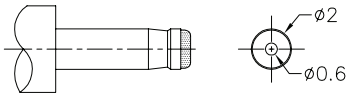

MATING PLUG
Jack Insertion Depth: 5.5mm

SCHEMATIC	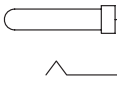
Model	PJ-077
Center Pin	Ø0.5 mm

DISCONTINUED

REVISION HISTORY

rev.	description	date
1.0	initial release	01/07/2013
1.01	increased voltage rating	04/14/2016
1.02	updated datasheet	10/19/2017
1.03	brand update	10/18/2019
1.04	logo, datasheet style update	08/05/2022

The revision history provided is for informational purposes only and is believed to be accurate.

DISCONTINUED

CUI Devices offers a one (1) year limited warranty. Complete warranty information is listed on our website.

CUI Devices reserves the right to make changes to the product at any time without notice. Information provided by CUI Devices is believed to be accurate and reliable. However, no responsibility is assumed by CUI Devices for its use, nor for any infringements of patents or other rights of third parties which may result from its use.

CUI Devices products are not authorized or warranted for use as critical components in equipment that requires an extremely high level of reliability. A critical component is any component of a life support device or system whose failure to perform can be reasonably expected to cause the failure of the life support device or system, or to affect its safety or effectiveness.

cuidevices.com