CAPAROC E1 12-24DC/1-10A - Electronic circuit breaker

1115649

https://www.phoenixcontact.com/us/products/1115649

Please be informed that the data shown in this PDF document is generated from our online catalog. Please find the complete data in the user documentation. Our general terms of use for downloads are valid.



1-channel electronic circuit breaker module for protecting 12 and 24 V DC loads against overload and short circuit. Nominal current adjustable from 1 A to 10 A via LED button. For DIN rail installation via the CAPAROC current rails.

Your advantages

- The benchmark that you can tailor with channel-precise design with integrated potential distribution
- Easy operation for everyone through tool-free assembly, uninterrupted installation, and transparent operating state
- Exceptionally easy design-in with the narrowest of space requirements and four protected outputs

Commercial data

Item number	1115649
Packing unit	1 pc
Minimum order quantity	1 pc
Sales key	CL11
Product key	CLA232
GTIN	4063151039967
Weight per piece (including packing)	77.4 g
Weight per piece (excluding packing)	71.4 g
Customs tariff number	85363010
Country of origin	DE

Technical data

Notes

General

Note	LABS release – in accordance with test specification VW PV 3. 10.7:2005-0

Product properties

Product type	Device circuit breakers
Product family	CAPAROC
Type	Plug-in module
Number of positions	1
No. of channels	1
Number of slots	1

Insulation characteristics

Protection class	III
Pollution degree	2

Electrical properties

General

Operating voltage	10 V DC ... 30 V DC
Rated voltage	12 V DC
	24 V DC
Rated current I_N	10 A DC (per channel)
Rated current I_N	1 / 2 / 3 / 4 / 5 / 6 / 7 / 8 / 9 / 10 A DC (adjustable per output channel)
Rated current (pre-adjusted)	4 A
Rated surge voltage	0.5 kV
Tripping method	E (electronic)
Required backup fuse	Only required if I_{max} of the power supply > the short-circuit switching capacity. Integrated failsafe element.
Short-circuit switching capacity	300 A
Dielectric strength	35 V DC (Load circuit)
Fuse	electronic
Efficiency	> 99 %
Closed circuit current I_0	typ. 8.5 mA (no load at 24 V)
Power dissipation	typ. 0.2 W (no load at 24 V)
	< 1.6 W (in nominal operation at 24 V and 10 A)
Measuring tolerance I	± 15 % (typ.)
Temperature derating	10 A (Total current at 40°C)
	7 A (Total current at 65 °C)
MTBF (IEC 61709, SN 29500)	18685596 h (at 25 °C with 21 % load)
	7871572 h (at 40°C with 34.25% load)

	1102033 h (at 40°C with 100% load)
Voltage drop	0.14 V (at 10 A)
Fail-safe element	15 A DC (per output channel)
Contact switching type	without electrical isolation

Load circuit

Shutdown time	4 s (with overload 1.1…1.5 x I_N)
	1 s (with overload 1.5…2.0 x I_N)
	0.1 s (with overload 2.0…3.0 x I_N)
	typ. 10 ms (For short circuit > 3.0 x I_N)
Undervoltage switch-off	≤ 8.5 V DC (active)
	≥ 9.2 V DC (inactive)
Overvoltage switch-off	≥ 32.5 V DC (active)
	≤ 30.5 V DC (inactive)
Max. capacitive load	≤ 20000 µF (Depending on the current setting and the short-circuit current available)
Switch-on delay	50 ms (can be adapted with CAPAROC PM IOL and CAPAROC PM PN power modules)

Connection data

Fuse-protected output

Connection method	Push-in connection
Stripping length	10 mm
Conductor cross-section flexible	0.2 mm² ... 4 mm²
Conductor cross-section rigid	0.2 mm² ... 4 mm²
Conductor cross-section AWG	24 ... 12
Conductor cross-section, flexible, with ferrule, with plastic sleeve	0.25 mm² ... 4 mm²
Conductor cross-section flexible, with ferrule without plastic sleeve	0.25 mm² ... 4 mm²

Signaling

Channel LED off	off (Channel switched off)
Channel LED yellow	lit (Channel switched on, channel load > 80%)
	flashing (Programming mode active)
	two flashes (Check the installation, no communication to power module)
Channel LED green	lit (Channel switched on)
Channel LED red	lit (Channel switched off, over- or undervoltage active)
	ON temporarily (Channel switched off, 5 s cool-down phase, overload or short-circuit release)
	flashing (Channel switched off, ready to be switched back on, overload or short-circuit release)

Dimensions

Dimensional drawing	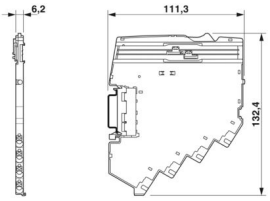
Width	6.2 mm
Height	132.4 mm
Depth	111.3 mm (incl. DIN rail 7.5 mm)

Material specifications

Color	light gray (RAL 7035)
Material	PA 6
	PA 6
	PA 6
	PC
Flammability rating according to UL 94	V-0

Environmental and real-life conditions

Ambient conditions

Degree of protection	IP20
Ambient temperature (operation)	-30 °C ... 65 °C (The temperature range of the power module must be taken into consideration)
Ambient temperature (storage/transport)	-40 °C ... 70 °C
Altitude	≤ 4000 m (amsl)
Humidity test	96 h, 95 % RH, 40 °C
Shock (operation)	30g (11 ms period, half-sine shock pulse, according to IEC 60068-2-27)
	25g (6 ms duration, half-sine shock pulse in accordance with IEC 60068-2-27, continuous shock)
	15g (6 ms duration, half-sine shock pulse in accordance with IEC 60068-2-27, continuous shock. If more than six CAPAROC E1 modules are used in the system.)
Vibration (operation)	5g (10 Hz ... 150 Hz / 10 cycles / axis / X, Y, Z)

Approvals

UL approval

Identification	UL/C-UL Listed UL 508
	UL Recognized UL 2367
	UL 121201 Class I, Division 2, Groups A, B, C, D, T4A

Corrosive gas test

Identification	ISA S71.04.2013 G3 Harsh Group A

Standards and regulations

Standards/specifications	EN 61000-6-2
Note	EMC – Immunity for industrial areas
Standards/specifications	EN 61000-6-3
Note	EMC – Emission for residential, business and commercial properties and small operations
Standards/specifications	EN 60068-2-78
Note	Environmental influences – Moisture and heat, constant
Standards/specifications	EN 50178
Note	Equipping power installations with electronic equipment
Standards/specifications	EN 60068-2-6
Note	Environmental influences – Vibrations (sinusoidal)
Standards/specifications	EN 60068-2-27
Note	Environmental influences – Shocks

Mounting

Mounting type	pluggable onto CAPAROC CR… current rail

Drawings

Dimensional drawing

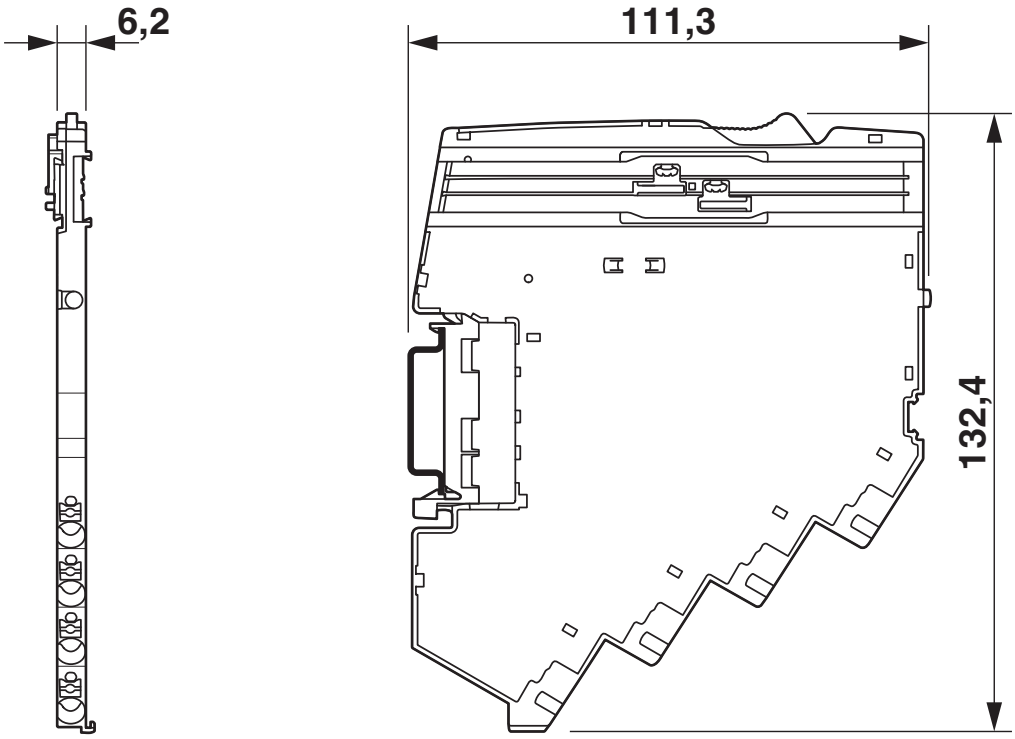

Product drawing



Application drawing

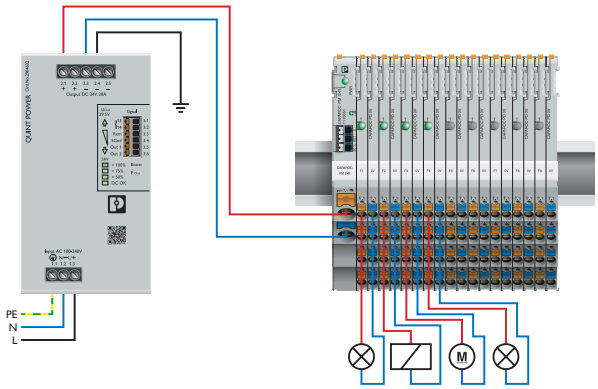

Diagram

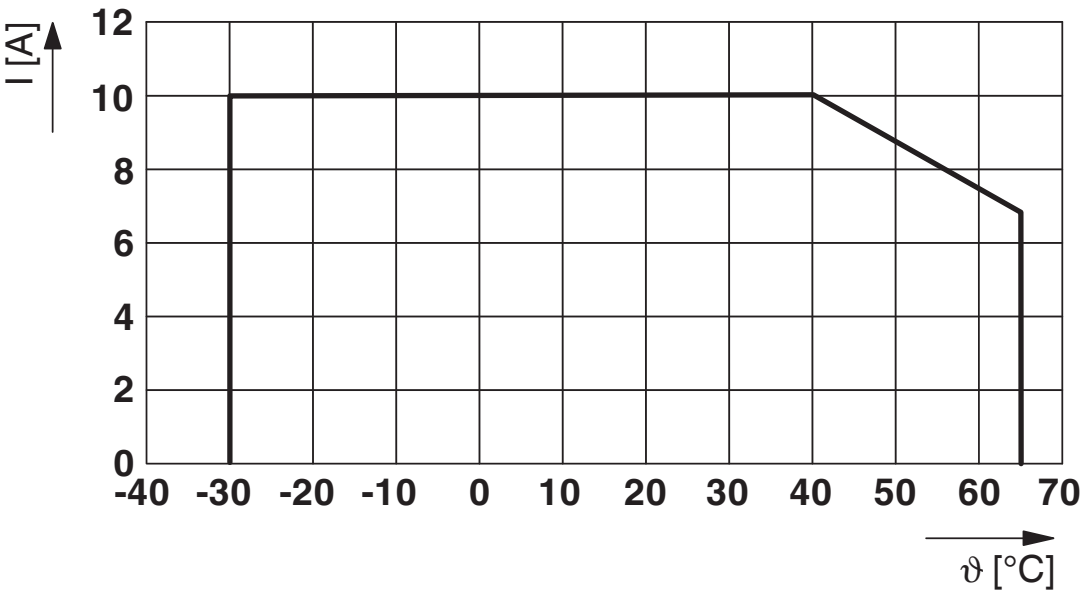

Diagram

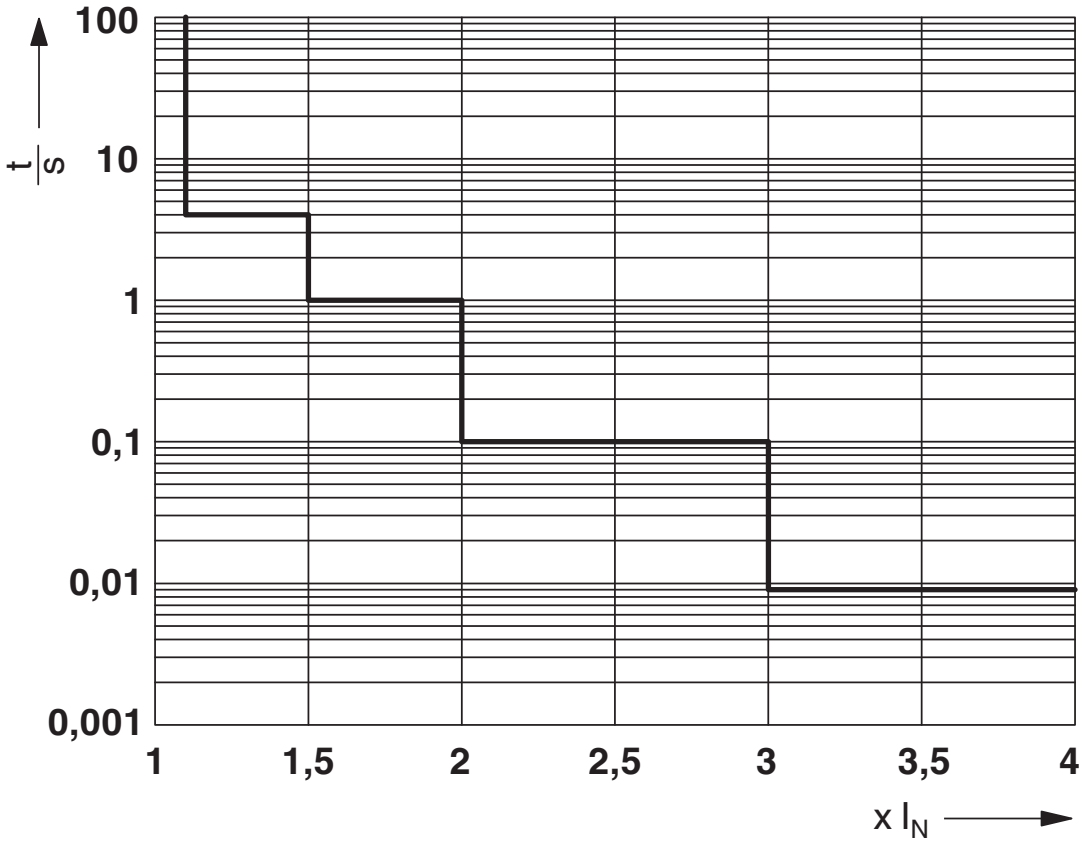

Trigger characteristic

Block diagram

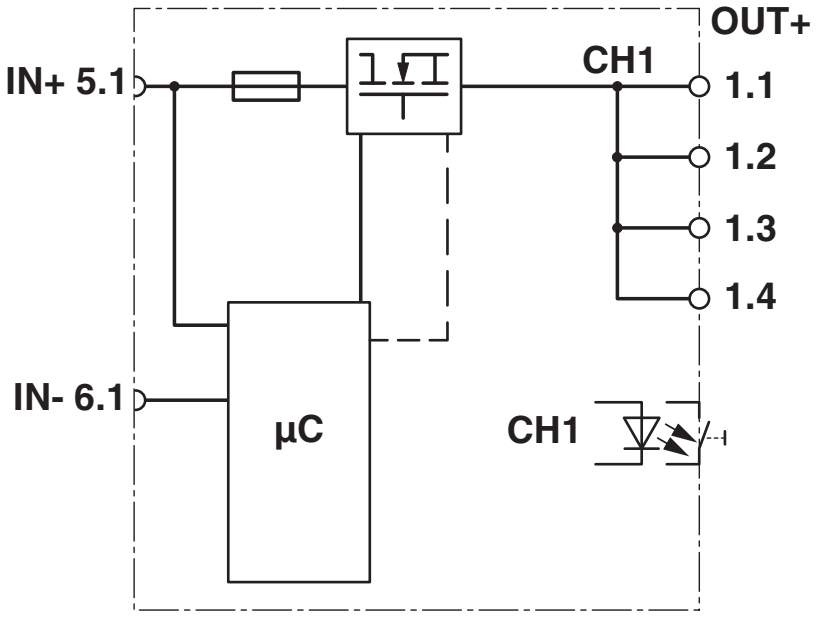

Approvals

To download certificates, visit the product detail page: https://www.phoenixcontact.com/us/products/1115649

UL Recognized
Approval ID: FILE E 317172

UL Listed
Approval ID: E123528

cUL Listed
Approval ID: E123528

UL Recognized
Approval ID: FILE E 324415

cUL Listed
Approval ID: FILE E 483407

UL Listed
Approval ID: FILE E 483407

Classifications

ECLASS

ECLASS-13.0	27140401
ECLASS-15.0	27140401

ETIM

ETIM 9.0	EC003538

UNSPSC

UNSPSC 21.0	39121400

Environmental product compliance

EU RoHS

Fulfills EU RoHS substance requirements	Yes
Exemption	7(a), 7(c)-I

China RoHS

Environment friendly use period (EFUP)	EFUP-50
	An article-related China RoHS declaration table can be found in the download area for the respective article under "Manufacturer declaration". For all articles with EFUP-E, no China RoHS declaration table issued and required.

EU REACH SVHC

REACH candidate substance (CAS No.)	Lead(CAS: 7439-92-1)
	2,2',6,6'-tetrabromo-4,4'-isopropylidenediphenol(CAS: 79-94-7)
SCIP	b3210588-c241-47b6-b354-b245d989b46b

Phoenix Contact 2025 © - all rights reserved
https://www.phoenixcontact.com

Phoenix Contact USA
586 Fulling Mill Road
Middletown, PA 17057, United States
(+717) 944-1300
info@phoenixcon.com