CUI DEVICES



## **MODEL:** SJ-3552B-MSMT-TR-67 | **DESCRIPTION:** AUDIO JACK

### FEATURES

- IP67 waterproof
- mid surface mount
- angle insertion hole
- reflow solder compatible



## SPECIFICATIONS

| parameter | conditions/description | min | typ | max | units |
|---|---|---|---|---|---|
| rated input voltage | | | 12 | | Vdc |
| rated input current | | | | 1 | A |
| contact resistance[1] | between terminal and mating plug<br>between terminal and shunt | | | 50<br>50 | mΩ<br>mΩ |
| insulation resistance | at 500 Vdc between adjacent contacts | 100 | | | MΩ |
| voltage withstand | for 1 minute between adjacent contacts | | | 250 | Vac |
| insertion/withdrawal force | | 0.4 | | 3 | kgf |
| operating temperature | | -30 | | 85 | °C |
| storage temperature | | -40 | | 85 | °C |
| life | at a rate of 500 cycles/hour | | 10,000 | | cycles |
| flammability rating | UL94V-0 | | | | |
| RoHS | yes | | | | |
| IP level | IP67 | | | | |

Note: 1. When measured at a current of less than 100 mA/1 kHz
2. All specifications measured at 10~35°C, humidity at 45~85%, under standard atmospheric pressure, unless otherwise noted.

## SOLDERABILITY

| parameter | conditions/description | min | typ | max | units |
|---|---|---|---|---|---|
| reel storage | at relative humidity <60% | | | 30 | °C |
| reflow soldering[3] | see reflow profile | | 260 | 270 | °C |

Note: 3. It is recommended to reflow solder within 72 hours from opening vacuum packaging at a temperature <30°C & relative humidity <60%.

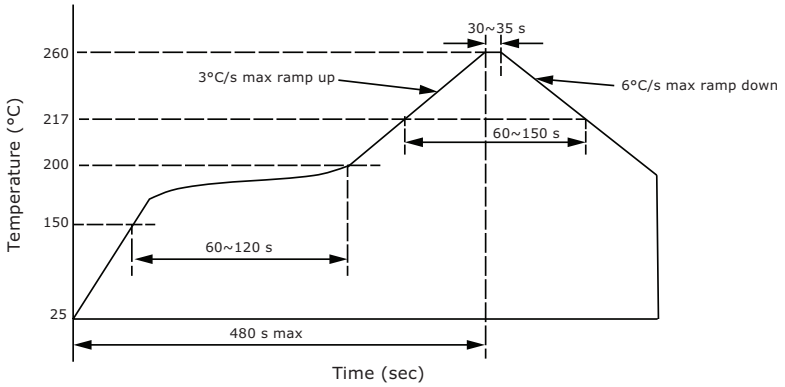

## MECHANICAL DRAWING

units: mm
tolerance:
X.X ±0.3 mm
X.XX ±0.20 mm
PCB: ±0.05 mm

| | MATERIAL | PLATING |
|---|---|---|
| housing 2 | PA-9T | black |
| housing 1 | PA-9T | black |
| assist pin | stainless steel | |
| GND contact | PBS | contact: 5 µ" gold<br>others: gold flash |
| ring 2 contact | PBS | |
| tip contact | titaninum<br>copper alloy | |
| term. 5 contact | PBS | |
| term. 6 contact | PBS | |
| ring 1 contact | PBS | |
| o-ring (OR-50) | silicone | black |

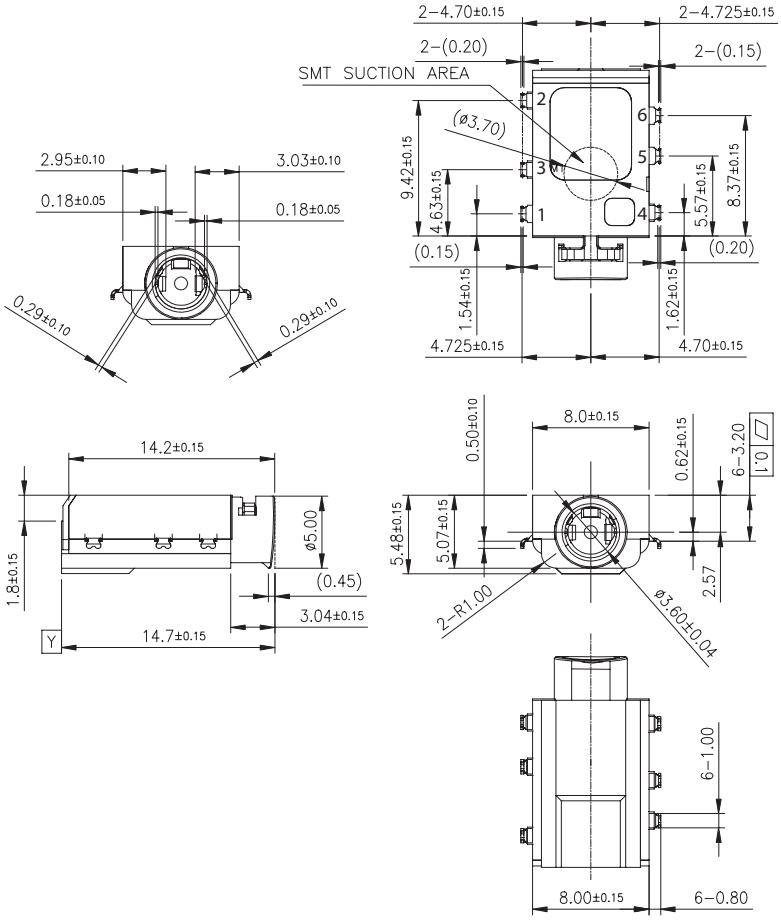


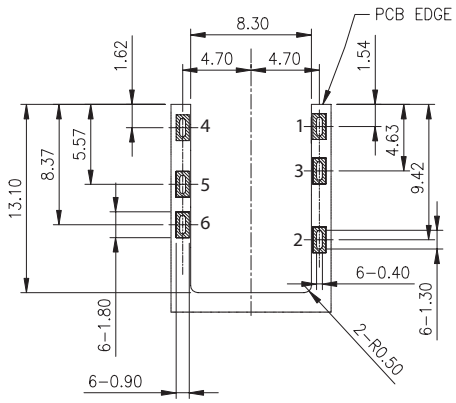


Recommended PCB Layout
Top View

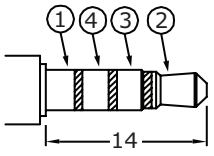


Ø3.5 MATING PLUG

| Schematic | 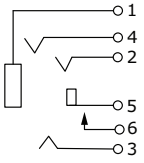 |
|---|---|
| PIN | |
| 1 | sleeve |
| 2 | tip |
| 3 | ring 1 |
| 4 | ring 2 |
| 5 | isolated tip |
| 6 | isolated tip<br>switch (N-O) |



### O-ring (P/N: OR-50)

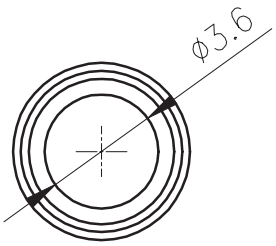


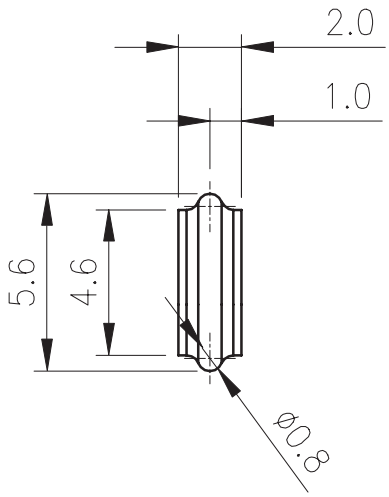

## ASSEMBLY REFERENCE

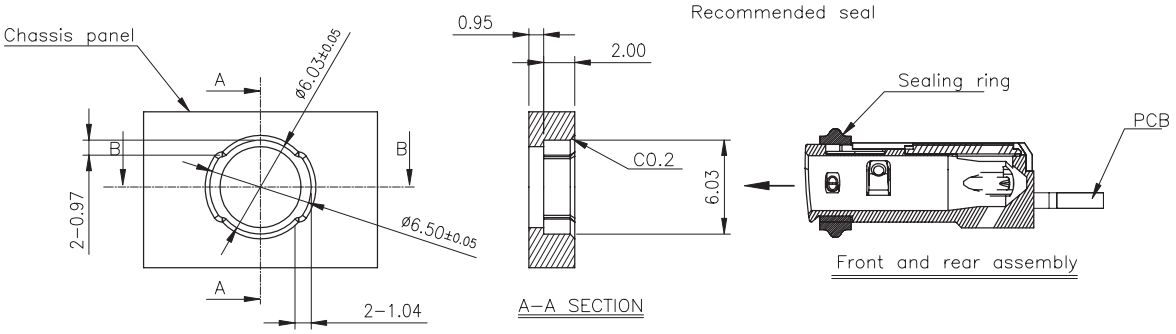


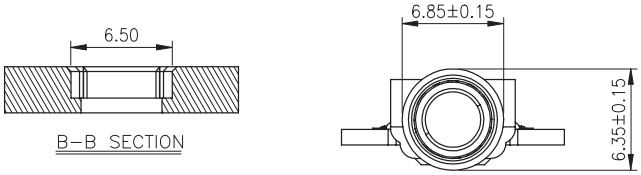


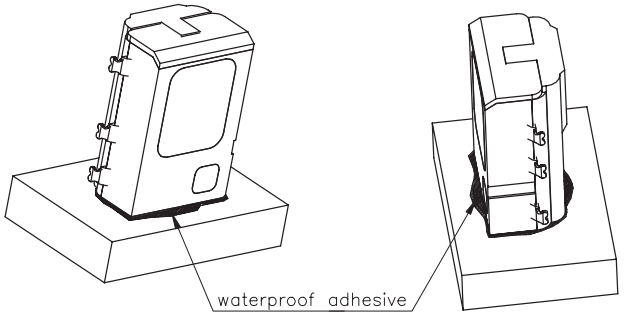


After the finished product is inserted into the mechanism a circle of waterproof adhesive must be dotted around it

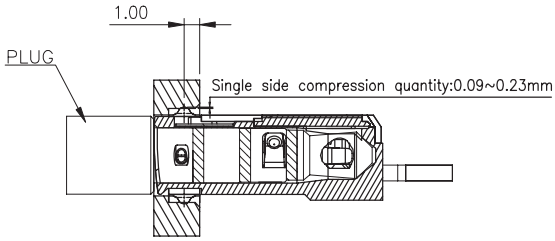


Schematic diagram of male and female head pointing

## PACKAGING

units: mm

Reel Size: Ø330 mm
Reel QTY: 600 pcs per reel

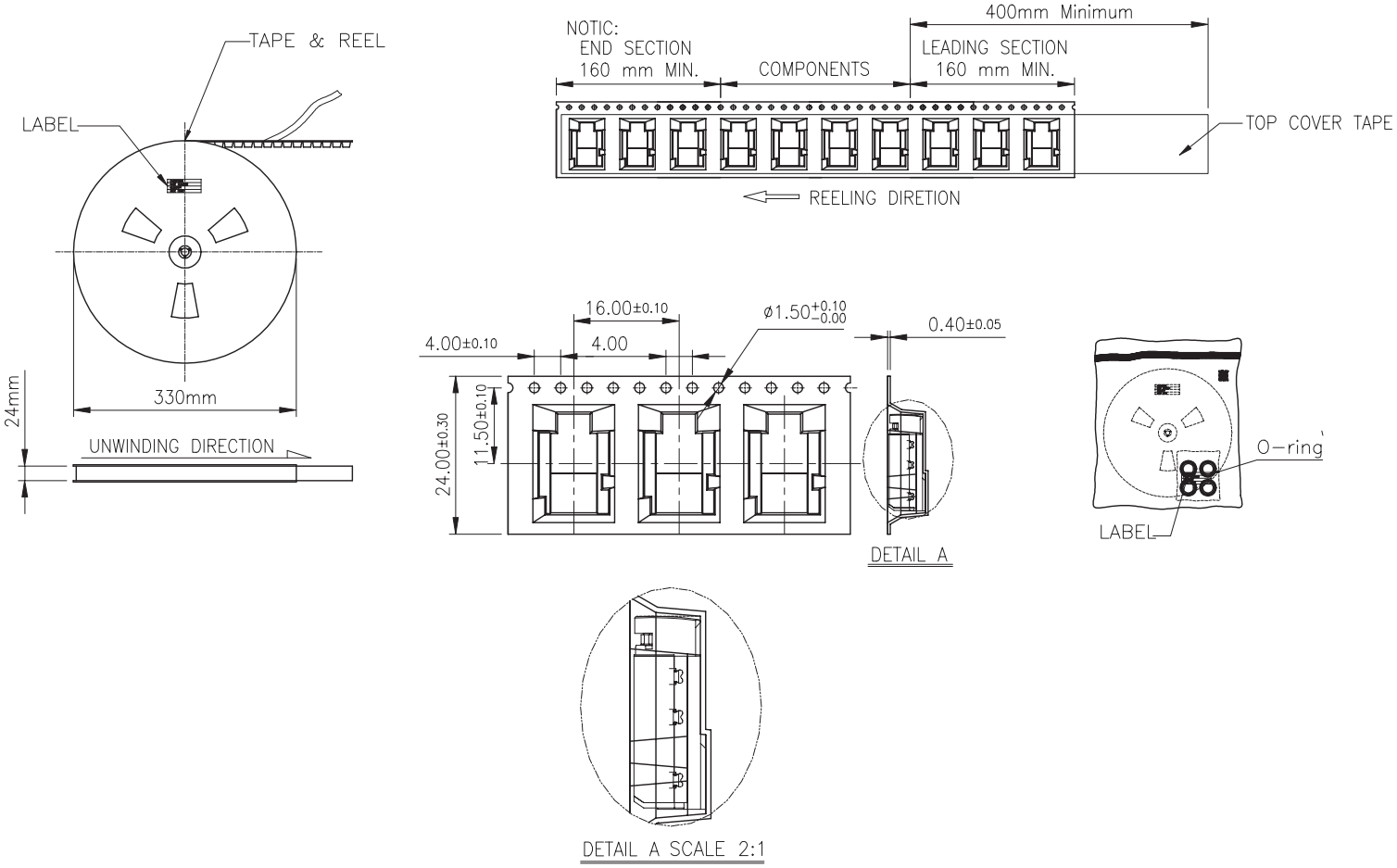

## REVISION HISTORY

| rev. | description | date |
|---|---|---|
| 1.0 | initial release | 12/05/2018 |
| 1.01 | changed GND contact plating to be gold, moved o-rings to vacuum bag | 08/08/2019 |
| 1.02 | brand update | 10/08/2019 |
| 1.03 | added o-ring p/n | 04/07/2022 |

The revision history provided is for informational purposes only and is believed to be accurate.

CUI DEVICES

CUI Devices offers a one (1) year limited warranty. Complete warranty information is listed on our website.

CUI Devices reserves the right to make changes to the product at any time without notice. Information provided by CUI Devices is believed to be accurate and reliable. However, no responsibility is assumed by CUI Devices for its use, nor for any infringements of patents or other rights of third parties which may result from its use.

CUI Devices products are not authorized or warranted for use as critical components in equipment that requires an extremely high level of reliability. A critical component is any component of a life support device or system whose failure to perform can be reasonably expected to cause the failure of the life support device or system, or to affect its safety or effectiveness.

**cuidevices**.com